M3000 Motors for Hazardous Environments

ABB LV Motors M3000 Range

Making you more Competitive

ABB LV Motors knows about customer needs. For over 100 years we have been designing motors for every need and application. With a reputation for quality that is second to none, our offering is further complemented by our 24-hour availability, unsurpassed reliability and leading technology evident in our eBusiness solutions. For top performance and high efficiency motors combined with a unique and complete service offering, customers continually choose the ABB brand. From the most demanding industries to standard applications, our customers can rest assured that their needs are being met.

M3000

M3000 Range

Sometimes needs can be highly demanding. For those occasions, it's reassuring to know you can count on the highest quality motors, customized to fit your individual needs. Our unique M3000 range offers eff1 motors for the highest efficiency levels, bringing you environmental and economical savings. Thanks to our extended support and services such as eBusiness solutions, we also provide you with easy ordering and quick delivery. And our engineering support team offers a unique opportunity to receive product consultation from the people who designed these motors especially for you.

Totally enclosed squirrel cage three phase motors for hazardous environments

Contents

ABB reserves the right to change the design, technical specification and dimensions, without prior notice.

Hazardous environments

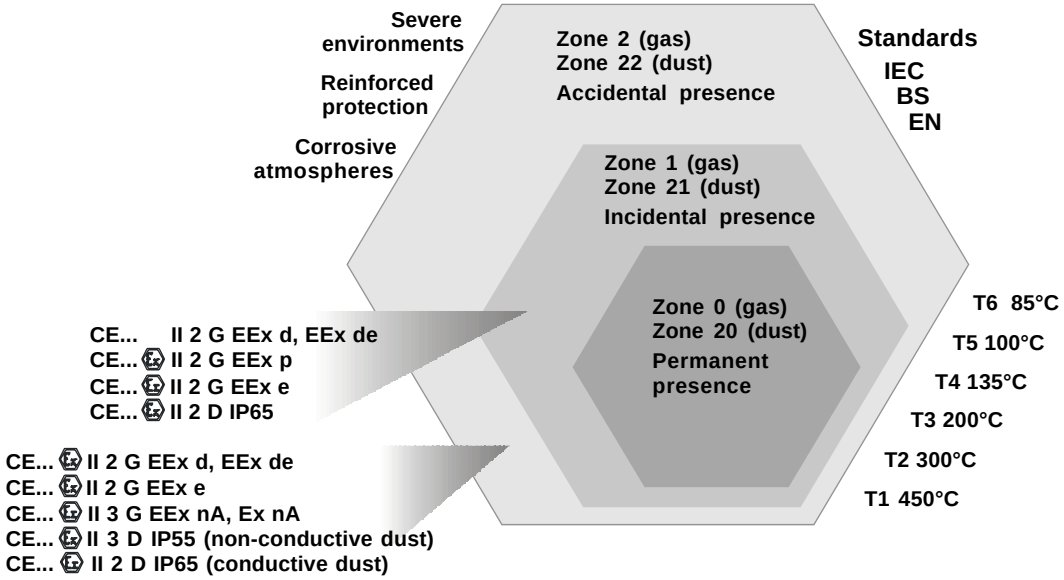

Environment	Group	Gas
Mines	I	Methane
Explosive atmos-	IIA	Propane
pheres other	IIB	Ethylene
than mines	IIC	Hydrogen, Acethylen

European Directives:
Directive 94/9/EC (ATEX) for explosive atmospheres
Low Voltage Directive 73/23/EEC amended by 93/68/EEC

Goal of 94/9/EC Directive

This directive aims to determine the framework for complete harmonization by determining the Essential Health and Safety Requirements (EHSRs) needed for products used in potentially explosive atmospheres to ensure a free movement in the EU territory.

However, according to Article 14 of 94/9/EC Directive the previous directives (76/117/EEC, 79/196/EEC) shall continue to be valid until the 30 June 2003, unless they expire before that date, after which the new directive will be enforced.

ABB Motors conform to both the previous and the new directive and thus comply with the other European Directives including:

- EMC Directive 89/336/EEC amended by 92/31/EEC and 93/68/EEC
- Machinery Directive 98/37/EEC (Certificate of Incorporation)

Furthermore, all our products are designed and manufactured to comply with the safety requirements detailed within the Low Voltage Directive.

In addition to the above, all ABB Motors' production units are certified to ISO 9001.

Low Voltage Directive

The Low Voltage Directive is mandatory for any electrical apparatus supplied with a voltage less than 1000V (AC) except equipment and apparatus mentioned in Annex II of this directive which is stated below:

Annex II of LVD 73/23/EEC:

« Equipment and phenomena outside the scope of the directive:

- Electrical equipment for use in an explosive atmosphere

- ..... »

Consequently the directive is not relevant for:

- Flame proof motors EEx d - EEx de
- Increased safety motors EEx e
- Non-sparking motors EEx nA
- Dust ignition protection motors DIP

Situation for products used in explosive atmospheres

The new Directive 94/9/EC, introduced to cover products for potentially explosive atmospheres known as the ATEX Directive, includes the Safety Requirements stated in Low Voltage Directive 73/23/EEC.

Marking temperatures, gas groups and hazardous areas

To ensure equipment can be safely used in potentially explosive atmosphere, the hazardous areas where the equipment is installed must be known (EN 1127-1 or IEC 60079-10), its gas group must be known and its temperature class must be compared with the spontaneous ignition temperature of the gas mixtures concerned.

Classification of hazardous locations

Explosive atmosphere	Permanent presence	Incidental presence (normal operation conditions)	Accidental presence (abnormal operation conditions)
IEC (International)	**Zone 0** (gas) **Zone 20** (dust)	**Zone 1** (gas) **Zone 21** (dust)	**Zone 2** (gas) **Zone 22** (dust)

Note: In certain countries EEx d and EEx e motors also used in Zone 2.

Temperature classes

Temperature class	Ignition temperature for the gas/vapor °C	Max. permitted temperature equipment °C
T1	> 450	450
T2	> 300 < 450	300
T3	> 200 < 300	200
T4	> 135 < 200	135
T5	> 100 < 135	100
T6	> 85 < 100	85

Grouping of electrical apparatus

Group I	Apparatus for coal mines susceptible to firedamp
Group II	Apparatus for explosive atmospheres other than mines; surface industries
IIA **IIB** **IIC**	Group II is subdivided according to the severity of the environment. IIC is the highest rating; a motor from one of the higher categories can also be used in a lower category environment

Classification

	Category equipment	Inflammable substances	Level of protection	Fault protection	Comparison with present practice and IEC
Equipment group I (mines)	**M1**	Methane, dust	Very high level	2 types of protection or 2 independent faults	Group I
	M2	Methane, dust	High level	1 type of protection Normal operation	Group I
Equipment group II (surface)	**1**	Gas, vapours, mist, dust	Very high level	2 types of protection or 2 independent faults	Group II Z0 (gas) / Z20 (dust)
	2	Gas, vapours, mist, dust	High level	1 type of protection Habitual frequent malfunction	Group II Z1 (gas) / Z21 (dust)
	3	Gas, vapours, mist, dust	Normal	Required level of protection	Group II Z2 (gas) / Z22 (dust)

Marking of equipment

- ❑ CE marking
- ❑ Identification of notified body
- ❑ European Commission mark for Ex-products
- ❑ Equipment group: Surface
- ❑ Equipment Gategory: (Zone 1 or Zone 21)
- ❑ Gas

CE ... Ex II 2 G

Additional marking:

EEx d II C T4

- ❑ Protection "d"
- ❑ Subgroup of Gas
- ❑ Surface temperature

Certificate number example:

LCIE 98 ATEX 6016

Selection of products for hazardous environments

EN Standard for Group II: Gas environments

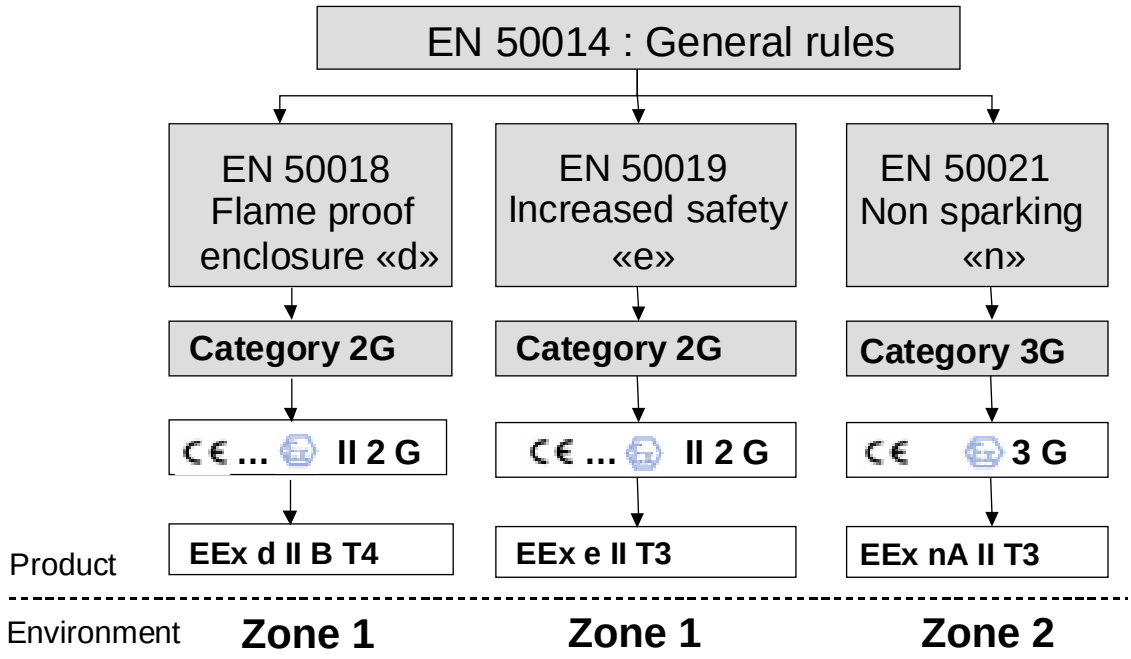

EN Standard for Group II: Dust environments

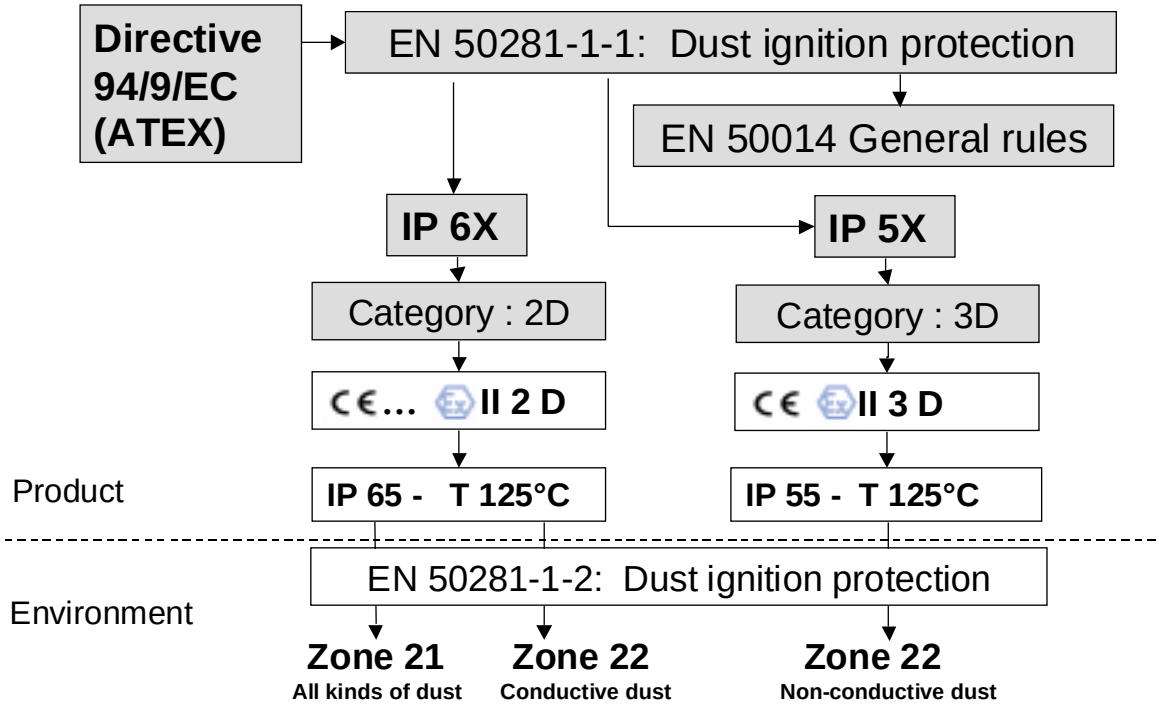

Dust Ignition protection in hazardous areas

Combustible dusts are hazardous because when they are dispersed in air from any source they form potentially explosive atmospheres. Further, layers of combustible dust may ignite and act as ignition sources for an explosive atmosphere.

Hazardous areas with dust can be found in a variety of industries such as:

- agriculture
- chemicals
- plastics
- stock holding

Selection and installation of electrical equipment

To ensure equipment can be safely used in hazardous areas with dust, the following should be considered before selecting a product:

1. Type of dust:

- Will a cloud of dust be present around the product or
- will a layer of dust build up on the product and if so, what will be the maximum thickness of the layer between two cleaning/maintenance periods?

2. Characteristics of the dust:

- Is the dust electrically conductive or non-conductive?

3. Ignition temperature of the dust:

- T_{CI}: Ignition temperature of dust in a "cloud" or
- T_{5mm}: Ignition temperature of a 5 mm dust layer

4. Area where the product is to be installed:

- Zone 20: Presence of dust continuously or long periods of time; no motors are allowed
- Zone 21: Presence of dust likely during normal operation
- Zone 22: Presence of dust only by accident and only for a short duration

Selection and installation of product: EN 50 281-1-2

Equipment category	Category 1 (Zone 21)	Category 2 (Zone 21 and conductive dust)	Category 3 (Zone 22 and non-conductve dust)
Minimum protection for equipment	not applicable	IP 6X	IP 5X

Marking temperature

Type of dust	Ignition temperature	Maximum surface temperature of motor	Marking temperature of equipment T°C
Cloud	T_{CI}	2/3 x T_{CI}	T°C ≤ 2/3 x T_{CI}
Layer up to 5 mm	T_{5mm}	T_{5mm} - 75 K	T°C ≤ (T_{5mm} - 75 K)
Layer above 5 mm	T_{5mm}	function of thickness	T°C
T_{5mm} is the ignition temperature of 5 mm layer of dust			

Substances (examples)

Dust	Wheat	Barley	Corn	Turniprape	Sunflower	Sugar	Lignite	Sulphur
T_{CI} (cloud)	420°C	450°C	400°C	480°C	490°C	350°C	450°C	190°C
T_{CI} (5mm)	200°C	205°C	250°C	230°C	220°C	220°C	200°C	220°C

Marking of equipment

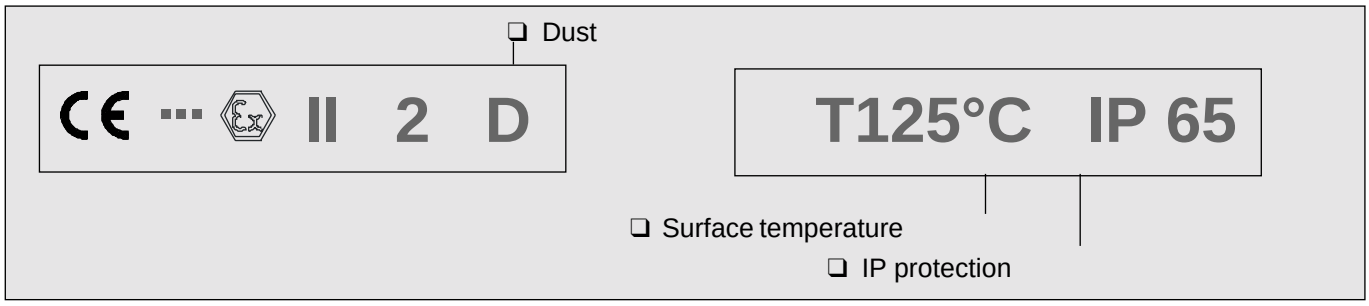

General about hazardous environments

Standards

Motors for hazardous areas comply with the following international standards:
- IEC publications 79-0 and 79-15; 61241-1-1 (1999)
- European standards EN 50014 to 50021
- European standards EN 50281-1-1
- British standards BS 5000 Part 16

Preamble

In hazardous areas, it is of utmost importance to ensure the safe use of electrical apparatus. To this end, many countries have regulations concerning both the design and use of such apparatus. These regulations are becoming increasingly harmonized within the framework of IEC recommendations and European Standards.

The hazard may be due to an explosive atmosphere composed of a mixture of gas, vapors or dusts with air. This chapter only deals with safety in explosive gas atmospheres for which European Standards exist.

Flameproof enclosure EEx d and EEx de

The motor enclosure shall be designed in such a way that no internal explosion can be transmitted to the explosive atmosphere surrounding the machine. The enclosure must withstand, without damage, any pressure levels caused by an internal explosion. The shape, length and gap of part assembly joints, at shaft opening, cable entries, etc., shall be designed to allow for throttling and cooling of hot gases escaping outside. The standards emphasize the impact of an explosive atmosphere (for instance, explosion pressure) over constructional requirements of such apparatus.

Work on assembly devices of enclosure component parts is only permitted using prescribed tools. Cable entries must meet the requirements of this type of protection.

The temperature of the motor's external enclosure should not exceed the self-ignition temperature of the explosive atmosphere of the installation area during normal operation. For this reason, rated output depends on this rated max. temperature for the considered area.

No motor device outside the flameproof enclosure (e.g., ventilation) shall be a potential source of sparks, arcs or dangerous overheating.

Variants combining two types of protection usually combine ”d” and ”e” protection. The most commonly used and recognized by the CENELEC European Standards is the EEx de variant. The motor is designed with an EEx d flameproof enclosure, while the terminal box features an EEx e increased safety protection. Such design combines the superior safety degree of the ”d” type of protection with the less stringent electrical connection requirements of increased safety motors.

Motors featuring dual protection are seldom encountered - such as an increased safety motor with a flameproof enclosure designated EEx e + EEx d in European Standards.

Alleinschutz – thermistors as sole protection (optional)

The flameproof motors from ABB Motors, frame sizes 80 to 400, have been certified for thermistors as sole protection against overload. This construction, "Alleinschutz", is available as option, see variant codes.

„Alleinschutz“ is a term that defines the certification of flameproof motor and protection device together. The certificate confirms that thermistors and relays will switch off the motor in case of overheating before any danger of explosion can occur.

Each motor ordered with thermistors as sole protection will be tested with locked rotor up to the point where the termistors trigger to ensure the functionality of the thermistors. The temperature within the motor will rise up to the point where the thermistors will trigger and the relays will turn off the motor. At the triggering temperature the motor has to be within the certified temperature class.

The relay is included in the certificate, which means that only approved relays can be used for „Alleinschutz“.

Please note that sizes 315 to 400 requires special technical solutions, consult ABB Motors.

Increased safety design, EEx e

The design of this motor type prevents the occurrence of sparks, arcs or hot spots in service (including starting and locked rotor situation), that could reach the self-ignition temperature of the surrounding, potentially explosive atmosphere, in all inner and outer parts of the machine.

This is ensured by applying constructional or dimensional provisions that mainly concern:

- specified minimum values for creepage distances and clearances
- use of tracking-proof isolating materials
- suppression of sharp angles where static electrical loads could build-up
- ensuring electrical and mechanical assemblies are tightly secured
- minimum backlash values between stationary and rotating parts (e.g., air gap, ventilation, etc.)
- temperature-rise limits, taking into account locked rotor, normal operation, accidental mechanical stalling of machine under the most adverse thermal conditions, i.e. when thermal equilibrium of machine is reached while in service.

Temperature rise limits are to be considered for two operating aspects; one for normal operating conditions and the other under accidental stalling conditions.

Temperature rise limits under normal operating conditions

The expected electrical lifespan of a motor depends on its temperature rise for a given insulation class, and on the motor winding temperature, in operation, which is not homogeneous with hot spots appearing.

For these reasons, a safety margin of 10 K is allowed for between windings temperature rise at rated output, as measured by the change of resistance method, and the maximum temperature rise permitted by the winding insulation class.

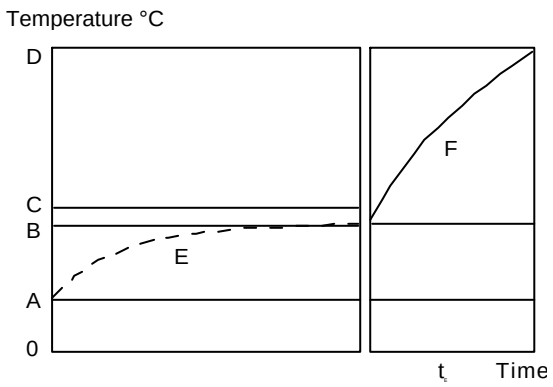

Figure 1.
O = temperature 0°C
A = Max. ambient temperature, reference 40°C
B = Temperature at rated load
C = Max temperature as permitted by the insul. class
D = Max limit temperature as set by the nature of the potentially explosive atmosphere
E = Temperature-rise curve of motor at rated output
F = Temp. rise curve under stalled rotor conditions
t_E = stalled rotor time

Temperature rise limits during short circuit under accidental stalling conditions

Should the machine stall while in operation, a short-circuit current nearly equal to the starting current will develop, and stator and rotor winding temperatures will rise rapidly (see figure 1).

To prevent this temperature value from exceeding the temperature level below which the apparatus should not cause the spontaneous ignition of an explosive atmosphere, protection devices must trip within a specified time (t_E). This tripping time depends on the short-circuit current level or the short-circuit current to rated current ratio (I_A / I_N). Figures 2 and 3 show, for commonly used protection devices, the limiting ratio between short-circuit current inrush I_A / I_N and rotor stalling time t_E, according to the EN and VIK.

This type of protection is inappropriate for commutator machines or brake-motors which, by principle, are capable of producing arcs, sparks or hot spots.

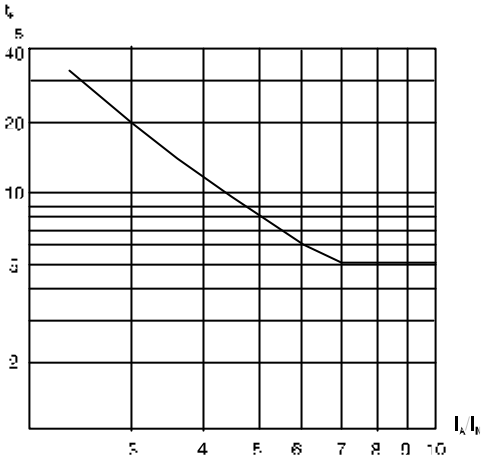

Figure 2. Min. value of time t_E as a function of I_A/I_N *acc. to EN 50019.*

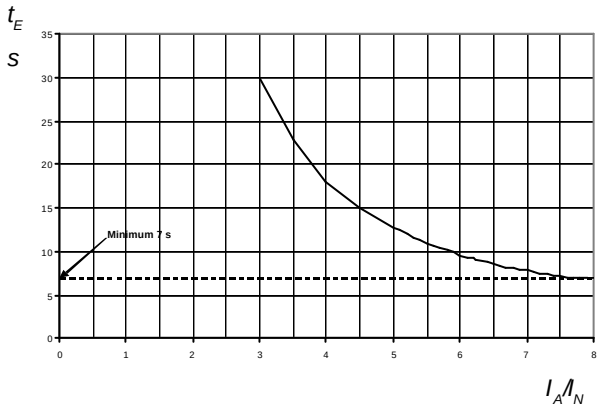

Figure 3. Min. value of time t_E as a function of I_A/I_N *acc. to VIK.*

Non-sparking design, EEx nA, Ex nA, Ex N

This type of protection is allowed to be used in hazardous area corresponding to zone 2. The mechanical desing is close to 'e' protection. Yet, these features and requirements aim only at protecting against ignition of an explosive atmosphere, in normal operation, and used within the ratings specified by the manufacturer, which excludes thermal requirements due to starting or accidental stalling.

This design is also known as 'Non-sparking' type as the motor must be designed in such a way that no sparks can occur.

Marking and design according to standard EN 50021 is EEx nA; where EEx n = European standard for Ex-product with protection "n"; A = for non-sparking apparatus which fulfill the EHSRs of directive 94/9/EC.

The corresponding marking according to IEC 79-15 is Ex nA and according to British Standard BS 5000 Part 16 Ex N.

Testing and certificates

Motors for hazardous areas have to be officially approved by a recognized test organization, authorized to issue test certificates, to ensure compliance with standards for this type of equipment.

Motors are defined and classified according to the potentially explosive atmospheres present at the installation site, described on page 4.

Depending on the nature of the atmosphere, it is the responsibility of the user to determine which group and which maximum surface temperature should be specified for the motor installation.

The motors are rated and certified for ambient temperature between -20°C and +40°C according to standards.

For ambient temperature between -55°C and above +40°C certificates are available for some motors, please contact ABB.

ABB Motors conform to the stringent standards set by EN (European Community), and are approved by testing laboratories (= Notified Body). The EU member countries have a common standard for motors for hazardous environments; Euronorm EN 50014-50021 and EN 50281-1-1. The standard can be certified by any of the Notified Bodies of EU member countries. These motors are therefore acceptable in all EU countries and most other countries.

General Technical Specification

Mechanical and electrical design

Mounting arrangements

	CodeI/CodeII						Product code pos. 12
Foot-mounted motor.	IM B3 IM1001	IM V5 IM1011	IM V6 IM1031	IM B6 IM1051	IM B7 IM1061	IM B8 IM1071	A = foot-mounted, term.box top R = foot-mounted, term.box RHS L = foot-mounted, term.box LHS
	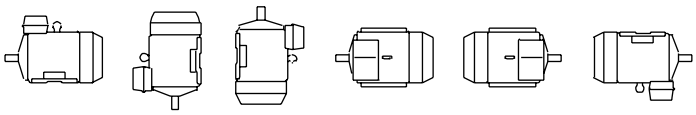						
Flange-mounted motor, large flange	IM B5 IM3001	IM V1 IM3011	IM V3 IM3031	*) IM3051	*) IM3061	*) IM3071	B = flange mounted, large flange
	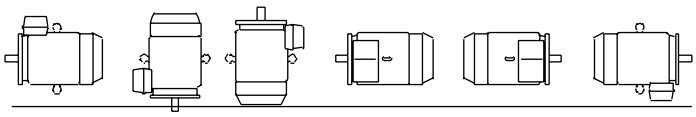						
Flange-mounted motor, small flange	IM B14 IM3601	IM V19 IM3611	*) IM3631	*) IM3651	*) IM3661	*) IM3671	C = flange mounted, small flange
	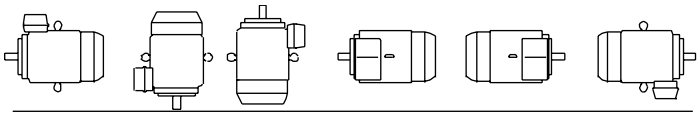						
Foot- and flange-mounted motor with feet, large flange	IM B35 IM2001	IM V15 IM2011	IM V36 IM2031	*) IM2051	*) IM2061	*) IM2071	H = foot/flange-mounted, term.box top S = foot/flange-mounted, term.box RHS T = foot/flange-mounted, term.box LHS
	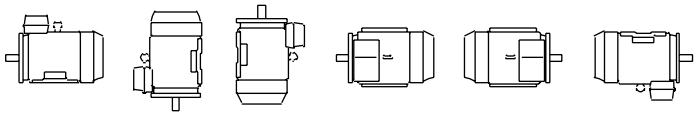						
Foot- and flange-mounted motor with feet, small flange	IM B34 IM2101	IM2111	IM2131	IM2151	IM2161	IM2171	J = foot/flange-mounted, small flange
	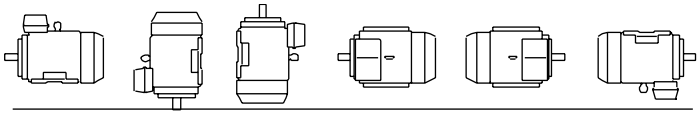						
Foot-mounted motor, shaft with free extensions	IM1002	IM1012	IM1032	IM1052	IM1062	IM1072	
	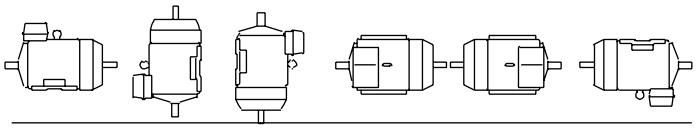						

*) Not stated in IEC 34-7.

Voltage and frequency

The table values for output, speed, efficiency, power factor, starting torque and starting current apply at the rated voltage and frequency. These values will be affected if the supply voltage or frequency deviate from the rated values.

The motors can operate continuously at the rated output, with a long-term voltage deviation of 5 % from the specified value or range of values, and at the rated frequency without exceeding the temperature class stamped on the rating plate. The temperature rise of the winding may increase by 10 K, but without exceeding the insulation temperature class stamped on the rating plate. Voltage deviations of up to 10 % are permissible for short periods only.

Protection against corrosion

Special attention has been paid to the finish of ABB's motors. All parts are treated by the method most appropriate to each material, giving reliable anti-corrosion protection under severe environmental conditions.

The color is blue, Munsel color code: 8B, 4.5/3.25 (NCS4822-B05G the closest shade in other standards). Specific details of paint types are available on request.

Drain holes

Non-sparking, Increased Safety and dust ignition proof motors are fitted with drain holes and plugs according to the table below.

Flameproof motors are not as standard fitted with drain holes, but can be on request, see variant codes.

Type of protection	Frame material	Frame size	Drain holes
Non-sparking, increased safety	Aluminium	63 - 250	closed
	Cast iron	71 - 132	optional
		160 - 400	open
Flameproof	Cast iron	80-400	not included, optional
Dust ignition proof	Aluminium	90-250	not included
Dust ignition proof, category 2D	Cast iron	80-315	not included, optional
Dust ignition proof, category 3D	Cast iron	80-132	optional
		160-400	open

Motor sizes 63 to 250:

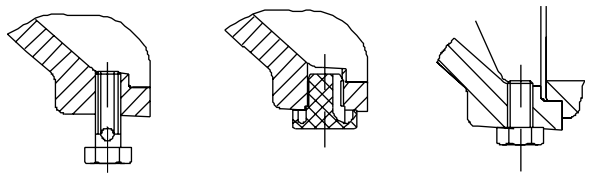

Motor sizes 160 to 400:

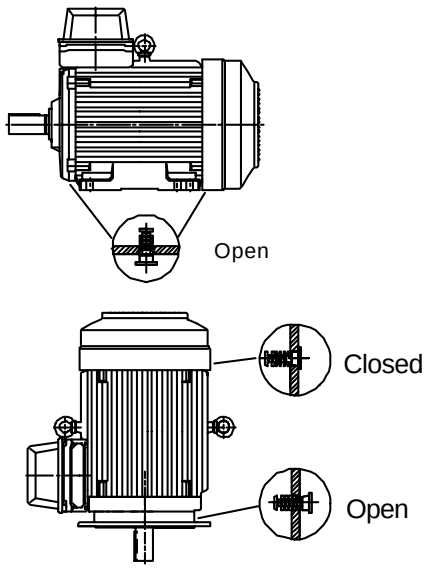

Bearings

ABB Motors policy is to have reliability as a vital issue in bearing design as well as in bearing lubrication systems. That is why we, as standard, follow the L1 -principle (meaning that 99 per cent of the motors are sure to make the interval time). The lubrication intervals can also be calculated according to L10 -principle which means that 90 per cent of the motors are sure to make the interval time. L10 -values, which are normally doubled compare to L1 -values, are available from ABB Motors at request.

Motors with permanently greased bearings

Cast iron motors up to frame size 132 and aluminium motors up to frame size 180 are normally fitted with permanently greased bearings of type Z or 2Z. As exception DIP motors with aluminium frame sizes 90-250 are fitted with 2RS bearings because higher protection is required.

Guidelines for bearing life time acc. to L_1 principle:

Aluminium motors

- 2 and 2/4 pole motors, 10 000 - 20 000 duty hours [1)]
- 4 to 8 pole motors, 20 000 - 40 000 duty hours [1)]

Cast iron motors

- 2 and 2/4 pole motors, 20 000 duty hours [1)]
- 4 to 8 pole motors, 40 000 duty hours [1)]

[1)] depending on application and load conditions.

Motors fitted with grease nipples

Cast iron motors from frame size 160 and aluminium motors from frame size 200 and above (DIP motors with aluminium frame excluded), are as standard fitted with regreasable bearings. Cast iron motors sizes 160 to 250 are also available as stocked option with bearings greased for life.

Lubricate the motor when operating.

For motors with lubrication systems we recommend not to exceed lubrication interval of two years in any case.

Lubrication

Lubricate the motor when operational. If a grease outlet plug is fitted, temporarily remove when lubricating, or permanently with auto lubrication. If the motor is fitted with a lubrication plate, use values given, else use the values given in the table beside. These values are according to L1 -principle, which is the ABB standard for all motors.

Frame size	Amount of grease g	3600 r/min	3000 r/min	1800 r/min	1500 r/min	1000 r/min	500-750 r/min
Ball bearings: lubrication intervals in duty hours							
112	12	10700	13000	18100	20900	25200	27700
132	15	9300	11300	17300	19000	22900	26400
160	26	7000	9300	14300	17300	20900	24000
180	30	5800	8100	13600	15700	19900	22900
200	40	3800	5800	10700	13000	17300	20900
225	46	3100	5000	10200	12400	16500	19900
250	60	2500	4000	9000	11500	15000	18000
280	67	2000	3500	8000	10500	14000	17000
315	90	2000	3500	6500	8500	12500	16000
355	120	1200	2000	4200	6000	10000	13000
400	120	1200	2000	4200	6000	10000	13000
Roller bearings: lubrication intervals in duty hours							
160	26	4600	6400	11300	14300	18100	21900
180	30	3400	5300	10700	13000	16500	19900
200	40	2100	3800	8100	10700	15000	18100
225	46	1500	3000	7300	9800	13600	17300
250	60	1300	2200	6300	8500	13000	16000
280	67	1000	2000	5700	7600	12000	15000
315	90	1000	2000	4000	6000	9000	13000
355	120	400	1000	2300	4000	7000	10000
400	120	400	1000	2300	4000	7000	10000

Standard bearing types

The motors are normally fitted with single-row deep groove ball bearings as listed in the table below.

For special bearings, please see the variant codes.

Motor size	Poles	Flameproof motors Bearing D-end	Flameproof motors Bearing N-end	Increased safety motors Bearing D-end	Increased safety motors Bearing N-end	Non-sparking motors Bearing D-end	Non-sparking motors Bearing N-end
Aluminium motors							
63	2-8			6202-2Z/C3	6202-2Z/C3	6202-2Z/C3	6202-2Z/C3
71	2-8			6203-2Z/C3	6202-2Z/C3	6203-2Z/C3	6202-2Z/C3
80	2-8			6204-2Z/C3	6203-2Z/C3	6204-2Z/C3	6203-2Z/C3
90	2-8			6305-2Z/C3	6204-2Z/C3	6305-2Z/C3	6204-2Z/C3
100	2-8			6306-2Z/C3	6205-2Z/C3	6306-2Z/C3	6205-2Z/C3
112	2-8			6206-2Z/C3	6205-2Z/C3	6206-2Z/C3	6205-2Z/C3
132	2-8			6208-2Z/C3	6206-2Z/C3	6208-2Z/C3	6206-2Z/C3
160	2-8			6309-2Z/C3	6209-2Z/C3	6309-2Z/C3	6209-2Z/C3
180	2-8			6310-2Z/C3	6209-2Z/C3	6310-2Z/C3	6209-2Z/C3
200	2-8			6312/C3	6210/C3	6312/C3	6210/C3
225	2-8			6313/C3	6212/C3	6313/C3	6212/C3
250	2-8			6315/C3	6213/C3	6315/C3	6213/C3
Cast iron motors							
71	2-8					6202-2RS/C3	6202-2RS/C3
80	2-8	6204-2Z/C3	6204-2Z/C3	6204-2Z/C3	6204-2Z/C3	6204-2RS/C3	6204-2RS/C3
90	2-8	6205-2Z/C3	6205-2Z/C3	6205-2Z/C3	6205-2Z/C3	6205-2RS/C3	6205-2RS/C3
100	2-8	6206-2Z/C3	6206-2Z/C3	6206-2Z/C3	6206-2Z/C3	6206-2RS/C3	6206-2RS/C3
112	2-8	6206-2Z/C3	6206-2Z/C3	6206-2Z/C3	6206-2Z/C3	6207-2RS/C3	6206-2RS/C3
132	2-8	6208-2Z/C3	6208-2Z/C3	6208-2Z/C3	6208-2Z/C3	6208-2RS/C3	6207-2RS/C3
160	2-8	6309/C3 [1]	6309/C3 [1]	6309/C3	6309/C3	6309/C3 [1]	6309/C3 [1]
180	2-8	6310/C3 [1]	6309/C3 [1]	6310/C3	6309/C3	6310/C3 [1]	6309/C3 [1]
200	2-8	6312/C3 [1]	6310/C3 [1]	6312/C3	6310/C3	6312/C3 [1]	6310/C3 [1]
225	2-8	6313/C3 [1]	6312/C3 [1]	6313/C3	6312/C3	6313/C3 [1]	6312/C3 [1]
250	2-8	6315/C3 [1]	6313/C3 [1]	6315/C3	6313/C3	6315/C3 [1]	6313/C3 [1]
280	2	6316/C4	6316/C4	6316/C4	6316/C4	6316/C4	6316/C4
	4-8	6316/C3	6316/C3	6316/C3	6316/C3	6316/C3	6316/C3
315	2	6316/C4	6316/C4	6316/C4	6316/C4	6316/C4	6316/C4
	4-8	6319/C3	6316/C3	6319/C3	6316/C3	6319/C3	6316/C3
355	2	6319M/C4	6319M/C4	6319M/C4	6319M/C4	6319M/C4	6319M/C4
	4-8	6322/C3	6319/C3	6322/C3	6319/C3	6322/C3	6319/C3
400	2	6319M/C4	6319M/C4	6319M/C4	6319M/C4	6319M/C4	6319M/C4
	4-8	6322/C3	6319/C3	6322/C3	6319/C3	6322/C3	6319/C3

[1] Motors also available as standard with bearings greased for life.

Motor size	Poles	Dust ignition protection Category 2 D Bearing D-end	Dust ignition protection Category 2 D Bearing N-end	Category 3 D Bearing D-end	Category 3 D Bearing N-end
Aluminium motors					
90	2-8	6305 2RSC3	6204 2RSC3	6305 2RSC3	6204 2RSC3
100	2-8	6306 2RSC3	6205 2RSC3	6306 2RSC3	6205 2RSC3
112	2-8	6206 2RSC3	6205 2RSC3	6206 2RSC3	6205 2RSC3
132	2-8	6208 2RSC3	6206 2RSC3	6208 2RSC3	6206 2RSC3
160	2-8	6309 2RSC3	6209 2RSC3	6309 2RSC3	6209 2RSC3
180	2-8	6310 2RSC3	6209 2RSC3	6310 2RSC3	6209 2RSC3
200	2-8	6213 2RSC3	6211 2RSC3	6213 2RSC3	6211 2RSC3
225	2-8	6214 2RSC3	6214 2RSC3	6214 2RSC3	6214 2RSC3
250	2-8	6214 2RSC3	6214 2RSC3	6214 2RSC3	6214 2RSC3
Cast iron motors					
71	2-8	–	–	6202-2RS/C3	6202-2RS/C3
80	2-8	6204-2RSC3	6202-2RSC3	6204-2RS/C3	6204-2RS/C3
90	2-8	6205-2RSC3	6205-2RSC3	6205-2RS/C3	6205-2RS/C3
100	2-8	6206-2RSC3	6206-2RSC3	6206-2RS/C3	6206-2RS/C3
112	2-8	6206-2RSC3	6206-2RSC3	6207-2RS/C3	6207-2RS/C3
132	2-8	6208-2RSC3	6208-2RSC3	6208-2RS/C3	6208-2RS/C3
160	2-8	6309/C3 [1]	6309/C3 [1]	6309/C3 [1]	6309/C3 [1]
180	2-8	6310/C3 [1]	6309/C3 [1]	6310/C3 [1]	6309/C3 [1]
200	2-8	6312/C3 [1]	6310/C3 [1]	6312/C3 [1]	6310/C3 [1]
225	2-8	6313/C3 [1]	6312/C3 [1]	6313/C3 [1]	6312/C3 [1]
250	2-8	6315/C3 [1]	6313/C3 [1]	6315/C3 [1]	6313/C3 [1]
280	2	6316/C4	6316/C4	6316/C4	6316/C4
	4-8	6316/C3	6316/C3	6316/C3	6316/C3
315	2	6316/C4	6316/C4	6316/C4	6316/C4
	4-8	6319/C3	6316/C3	6319/C3	6316/C3
355	2	6319M/C4	6319M/C4	6319M/C4	6319M/C4
	4-8	6322/C3	6319/C3	6322/C3	6319/C3
400	2	6319M/C4	6319M/C4	6319M/C4	6319M/C4
	4-8	6322/C3	6319/C3	6322/C3	6319/C3

[1] Motors also available as standard with bearings greased for life.

Transport locking

Motors with roller bearings or an angular contact ball bearing are fitted with a transport lock before despatch to prevent damage to the bearings during transport. When the transport lock is fitted, the motor is provided with a warning sign.

Locking may also be fitted in other cases where the transport handling could be damaging.

Axially-locked bearings

The table shows which motors are axially locked in the bearing seat, by an inner bearing cover.

See also variant code 042.

Aluminium motors

Motor size	Foot-mounted motors	Flange-mounted motors Large flange	Small flange
63-80	[1]	D-end	[1]
90-100	D-end	D-end	D-end
112-132	[1] [2]	D-end	D-end
160-180	D-end	D-end	
200-250	N-end	N-end	

[1] A spring washer at the N-end locks the rotor at the D-end.

[2] DIP motors locked at D-end

Cast iron motors

Motor size	Foot-mounted motors	Flange-mounted motors
Non-sparking and Increased safety motors:		
71-132	On request	On request
160-180	D-end	D-end
200-400	D-end	D-end
Flameproof motors:		
80-400	D-end	D-end

Permissible loadings on the shaft end

The following tables give the permissible radial and axial forces in Newton, assuming only radial or axial force is applied. Permissible loads of simultaneous radial and axial forces will be supplied on request.

The bearing life, L_{10}, is calculated according to ISO 281 standard theory, which also takes the purity of the grease into consideration. An adequate lubrication is a necessary prerequisite for the table below.

The values are based on normal conditions at 50 Hz. At 60 Hz the values must be reduced by 10 %. For two-speed motors, the values must be based on the higher speed.

Motors are foot-mounted IM B3 version with force directed sideways. In some cases the strength of the shaft affects the permissible forces.

If flameproof motors EEx d or EEx de sizes 160 and above are subject to high radial forces (e.g. belt drive) they should be fitted with roller bearings. Permissible radial forces for IIB and IIC on request.

Please note that motors type EEx d or EEx de IIB and IIC in size 250 and above with roller bearings require detailed information about power transmission; please consult ABB.

Aluminium Motors M2AA

Permissible axial force FA and radial force FR (acc. to L_{10}-principle)

			Ball bearings Basic design with deep groove ball bearings				Alternative design with 63-series bearings				Roller bearings Alternative design with roller bearings			
		Rotor weight	25.000 hrs		40.000 hrs		25.000 hrs		40.000 hrs		25.000 hrs		40.000 hrs	
Motor size	No of poles	FGR N	FA N	FR N	FA N	FR N	FA N	FR N	FA N	FR N	FA N	FR N	FA N	FR N
63[2]	2		590	400	520	400								
	4		665	400	580	400								
	8		695	400	600	400								
71[2]	2		735	570	650	570								
	4		820	570	720	570								
	6		885	570	770	570								
	8		880	570	765	570								
80[2]	2		1005	750	885	750								
	4		1120	750	995	750								
	6		1205	750	1050	750								
	8		1240	750	1075	750								
90[2) 3)]	2		1835	1200	1625	1200								
	4		2055	1200	1805	1200								
	6		2210	1200	1930	1200								
	8		2285	1200	1985	1200								
100[2) 3)]	2		2370	1800	2100	1800								
	4		2645	1800	2330	1800								
	6		2830	1800	2480	1800								
	8		2925	1800	2555	1800								
112 M[2]	2	64	1500	1420	1320	1280	2230	1700	1970	1700				
	4	84	1600	1410	1390	1250	2410	1700	2110	1700				
	6	85	1730	1510	1500	1340	2590	1700	2260	1700				
	8	89	1750	1530	1510	1360	2680	1700	2320	1700				
112 MB[2]	2	85	1530	1470	1340	1330	2250	1700	1990	1700				
	4	106	1600	1430	1390	1260	2410	1700	2110	1700				
	6	107	1720	1520	1490	1340	2590	1700	2250	1700				
	8	107	1760	1560	1520	1370	2680	1700	2320	1700				
132 SA[2]	2	89	2570	2360	2260	2140	3460	3180	3070	2870				
132 SB[2]	2	101	2570	2360	2260	2130	3460	3170	3070	2870				
132 SC[2]	2	143	2520	2430	2210	2200	3410	3200	3020	2960				
132 S[2]	4	138	2770	2440	2440	2180	3770	3200	3320	2990				
132 M[2]	4	160	2750	2410	2420	2150	3750	3200	3290	2950				
132 MB[2]	4	211	2680	2440	2340	2170	3670	3200	3220	3000				
132 S[2]	6	140	2950	2560	2580	2270	4020	3200	3520	3120				
132 MA[2]	6	165	2940	2530	2570	2250	4010	3200	3500	3100				
132 MB[2]	6	197	2910	2500	2550	2220	3980	3200	3480	3070				
132 MC[2]	6	214	2830	2510	2460	2220	3900	3200	3400	3090				
132 S[2]	8	165	3040	2630	2650	2330	4150	3200	3610	3200				
132 M[2]	8	197	3020	2590	2630	2300	4130	3200	3590	3170				
132 MB[2]	8	214	2940	2630	2560	2330	4050	3200	3520	3200				
160 MA[2]	2	211	4730	3500	4220	3500					3050	3500	2720	3500
	8	280	5240	3500	4640	3500					3400	3500	3100	3500
160 M[2]	2	227	4730	3500	4220	3500					3060	3500	2710	3500
	4	270	5230	3500	4640	3500					3370	3500	3000	3500
	6	320	5220	3500	4630	3500					3330	3500	2970	3500
	8	320	5220	3500	4630	3500					3330	3500	2970	3500
160 L[2]	2	277	5240	3500	4650	3500					3350	3500	2980	3500
	4	338	5220	3500	4630	3500					3330	3500	2970	3500
	6	374	5050	3500	4470	3500					3150	3500	2760	3500
	8	445	4720	3500	4740	3500					3590	3500	3170	3500
160 LB[2]	2	296	5240	3500	4650	3500					3350	3500	2980	3500
	4	374	5050	3500	4470	3500					3150	3500	2760	3500
	6	445	4720	3500	4740	3500					3590	3500	3170	3500
	8	445	4720	3500	4740	3500					3590	3500	3170	3500
180 M[2]	2	332	4660	5550	4250	5110					2820	5900	2420	5900
	4	451	4950	5710	4500	5200					3120	5900	2660	5900
180 L[2]	4	522	4870	5670	4390	5150					3030	5900	2560	5900
	6	571	5200	5900	4710	5500					3360	5900	2870	5900
	8	561	5370	5900	4850	5570					3540	5900	3010	5900

[1)]

Method of mounting	Direction of force	Permissible axial force
Horizontal	Horizontal	FA acc. to table
Vertical	Downwards	FA – rotor weight FGR[2])
Vertical	Upwards	FA + rotor weight FGR[2])

[2)] For motor sizes 63 to 180, axial tension in the direction of the shaft is assumend. The specified values take the weight of the rotor and the effects of the spring washer at the N-end into consideration.

[3)] Basic design with 63-series bearings at the D-end.

Permissible axial force FA and radial force FR - continued

Motor size	No of poles	Rotor weight FGR N	Ball bearings: Basic design with deep groove ball bearings 25.000 hrs FA N	FR N	40.000 hrs FA N	FR N	Alternative design with 63-series bearings 25.000 hrs FA N	FR N	40.000 hrs FA N	FR N	Roller bearings: Alternative design with roller bearings 25.000 hrs FA N	FR N	40.000 hrs FA N	FR N
180 LB[2]	2	382	4660	5550	4250	5110					2820	5900	2420	5900
	4	602	4870	5670	4390	5150					3030	5900	2560	5900
	6	610	5200	5900	4710	5500					3360	5900	2870	5900
	8	606	5370	5900	4850	5570					3540	5900	3010	5900
200 MLB[3]	2	559	1570	4060	1340	3590					1570	7790	1340	7790
	4	746	1670	4360	1400	3810					1670	7790	1400	7790
	6	785	1800	4540	1510	3940					1800	7790	1510	7790
	8	883	1780	4670	1470	4030					1780	7790	1470	7790
200 MLC[3]	2	579	1560	4050	1330	3590					1560	7790	1330	7790
	6	873	1670	4430	1380	3820					1670	7790	1380	7790
225 SMA[3]	4	746	2490	4930	2130	4320					2490	8300	2130	8300
	8	893	2790	5420	2380	4700					2790	8300	2380	8300
225 SMB[3]	2	697	2200	4530	1890	4010					2200	8900	1890	8900
	4	814	2440	4870	2070	4260					2440	8300	2070	8300
	6	691	2570	5080	2170	4400					2570	8300	2170	8300
	8	971	2720	5350	2310	4630					2720	8300	2310	8300
225 SMC[3]	2	765	2170	4510	1860	3990					2170	8900	1860	8900
	4	942	2360	4840	1980	4230					2360	8300	1980	8300
	6	1090	2465	5020	2065	4340					2460	8300	2060	8300
	8	1110	2580	5230	2160	4500					2580	8300	2160	8300
250 SMA[3]	2	824	2620	5620	2250	4980					2620	9100	2250	9100
	4	971	2970	6200	2530	5440					2970	11550	2530	11550
	6	1235	3100	6430	2630	5590					3100	11550	2630	11550
	8	1255	3230	6650	2740	5760					3230	11550	2740	11550
250 SMB[3]	2	942	2570	5610	2210	4960					2570	9100	2210	9100
	4	1175	2860	6140	2410	5380					2860	11550	2410	11550
	6	1430	2985	6400	2500	5560					2980	11550	2500	11550
	8	1450	3080	6590	2570	5700					3080	11550	2570	11550

[1]

Method of mounting	Direction of force	Permissible axial force
Horizontal	Horizontal	FA acc. to table
Vertical	Downwards	FA – rotor weight FGR[2])
Vertical	Upwards	FA + rotor weight FGR[2])

[2] For motor sizes 63 to 180, axial tension in the direction of the shaft is assumend. The specified values take the weight of the rotor and the effects of the spring washer at the N-end into consideration.

[3] Basic design with 63-series bearings at the D-end.

Cast iron Motors

Permissible radial forces (acc. to L_{10}-principle) - Motor sizes 71 - 132 *)

Non-sparking & Increased safety

Motor size	Poles	Length of shaft extension E (mm)	Ball bearings 20.000 hrs X_0(N)	X_{max}(N)
71	2	30	415	335
	4	30	415	335
	6	30	415	340
80	2	40	670	545
	4	40	890	725
	6	40	970	830
90 S	2	50	795	625
	4	50	995	780
	6	50	1135	880
90 L	2	50	780	635
	4	50	985	790
	6	50	1120	905
100	2	60	1090	875
	4	60	1360	1095
	6	60	1560	1250
112	2	60	1410	1120
	4	60	1735	1400
	6	60	2000	1620
132 S	2	80	1700	1330
	4	80	2130	1660
	6	80	2495	1935
132 M	2	80	1675	1345
	4	80	2130	1675
	6	80	2450	1960

Flameproof

Motor size	Poles	Length of shaft extension E (mm)	Ball bearings 20.000 hrs X_0(N)	X_{max}(N)
80	2	40	650	520
	4	40	830	680
	6	40	900	730
	8	40	900	730
90	2	50	720	575
	4	50	910	780
	6	50	1025	820
	8	50	1025	820
100, 112	2	60	1090	860
	4	60	1280	1025
	6	60	1460	1155
	8	60	1460	1155
132	2	80	1700	1380
	4	80	2020	1610
	6	80	2270	1805
	8	80	2270	1805

*) Values for frequency converter driven motors on request.

Cast iron motors, motor sizes M2BA/M3GP/M3HP 160-400, M2JA/M2KA 280-400

Permissible radial forces (acc. to L_{10}-principle)

Motor size	Poles	Length of shaft extension E (mm)	Ball bearings 20.000 hrs X_0 (N)	Ball bearings 20.000 hrs X_{max}(N)	Ball bearings 40.000 hrs X_0 (N)	Ball bearings 40.000 hrs X_{max}(N)	Roller bearings 20.000 hrs X_0 (N)	Roller bearings 20.000 hrs X_{max}(N)	Roller bearings 40.000 hrs X_0 (N)	Roller bearings 40.000 hrs X_{max}(N)
160	2	110	2970	2470	2320	1940	7650	3800	6190	3850
	4	110	3710	3090	2900	2420	8240	3800	7590	3850
	6	110	4320	3560	3360	2800	8140	3800	8180	3850
	8	110	4720	3940	3710	3090	8300	3800	8300	3850
180	2	110	3360	2780	2620	2180	8230	4750	6650	4750
	4	110	4180	3460	3260	2700	9650	4750	8130	4750
	6	110	4810	3990	3800	3120	9760	4750	9220	4750
	8	110	5330	4410	4180	3460	9650	4750	9650	4750
200 ML_	2	110	4500	3780	3520	2960	11460	8350	9100	7600
	4	110	5670	4750	4440	3720	14100	8350	11390	8310
	6	110	6480	5440	5070	4250	15900	8350	12850	8310
	8	110	7150	6010	5610	4710	17220	8350	14050	8310
225 SM_	2	110	5090	4350	3990	3390	14000	9400	11280	9400
	4	140	6380	5260	4980	4100	17250	9000	13930	9000
	6	140	7310	6010	5710	4690	19450	9000	15720	9000
	8	140	8090	6650	6320	5200	19600	9000	17170	9000
250 SM_	2	140	6270	5170	4890	4030	18580	9230	15020	9230
	4	140	7910	6510	6170	5090	22850	11500	18480	11500
	6	140	8990	7410	7010	5770	25570	11500	20800	11500
	8	140	9960	8200	7780	6400	26630	11500	22740	11500
280 SM_	2	140	7300	6200	5800	4900	20200	6600	16500	6600
	4	140	9200	7800	7300	6200	25000	12000	20300	12000
	6	140	10600	8900	8400	7100	28000	12000	23000	12000
	8	140	11600	9800	9200	7800	30700	12000	25000	12000
315 SM_	2	140	7300	6000	5800	4950	20200	6350	16500	6350
	4	170	11300	9400	9000	7500	32500	10700	26500	10700
	6	170	13000	10600	10300	8500	37000	10600	30000	10600
	8	170	14300	10400	11300	9400	40000	10400	32700	10400
315 ML_	2	140	7300	6000	5800	4950	20200	6000	16500	6000
	4	170	11300	9400	9000	7500	32500	18400	26500	18400
	6	170	13000	10800	10300	8500	37000	18400	30000	18400
	8	170	14300	12000	11300	9400	40000	18200	32700	18200
355 S_ [1]	2	140	9000	7900	6200	5300	26600	10100	21800	10100
	4	210	15200	12500	12000	9850	45000	22300	36700	22300
	6	210	17300	14200	13700	11300	51000	22300	41500	22300
	8	210	19000	15600	15200	12400	55500	22200	45200	22200
355 SM_ [1]	2	140	9000	7900	6100	5300	26700	8900	21800	8900
	4	210	15200	12500	12000	9850	45000	21400	36700	21300
	6	210	17300	14300	13700	11300	51000	21100	41500	21100
	8	210	19000	15700	15200	12400	55500	21700	45200	21700
355 ML_ [1]	2	140	9100	7100	6100	5400	26900	7100	21800	7100
	4	210	15200	12800	12000	10100	45500	19500	36700	19500
	6	210	17300	14600	13700	11500	51000	19000	41500	19000
	8	210	19300	16200	15200	12700	55500	19500	45200	19500
400 M_ [1]	2	140	9100	7100	6100	5400	26900	7100	21800	7100
	4	210	15200	12800	12000	10100	45500	19500	36700	19500
	6	210	17300	14600	13700	11500	51000	19000	41500	19000
	8	210	19300	16200	15200	12700	55500	19500	45200	19500
400 LK_ [1]	2	140	8900	3000	5700	3000	27000	3000	22000	3000
	4	210	15000	13000	11700	10100	46000	15000	37000	15000
	6	210	17200	13700	13600	11700	52000	13700	42000	13700
	8	210	19200	15000	15000	12900	55500	15000	46000	15000

[1] The values for sizes 355 and 400 are valid for non-sparking and increased safety M2BA motors. Values for flameproof motors M2JA and M2KA are available on request.

If the radial force is applied between points X_0 and X_{max}, the permissible force F_R can be calculated from the following formula:

$$F_R = F_{X0} - \frac{X}{E}(F_{X0} - F_{Xmax})$$

E = length of shaft extension in basic version

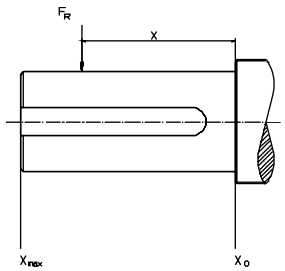

Flameproof motors EEx d, EEx de IIB/IIC M3JP/M3KP 160-250

Permissible radial forces (acc. to L_{10}-principle)

Motor size	Poles	Length of shaft extension E (mm)	Ball bearings 20.000 hrs X_0 (N)	X_1(N)	X_{max} (N)	Roller bearings 20.000 hrs X_0 (N)	X_1(N)	X_{max} (N)
160	2	110	3020	2740	1900	6700	4150	1600
	4	110	3780	3435	1900	6700	4150	1600
	6	110	4360	3960	1900	6700	4150	1600
	8	110	4810	4375	1900	6700	4150	1600
180	2	110	3420	3100	2780	7500	4950	2400
	4	110	4260	3860	2800	7500	4950	2400
	6	110	4910	4450	2800	7500	4950	2400
	8	110	5440	4925	2800	7500	4950	2400
200 ML_	2	110	4580	4180	3780	11460	9600	4200
	4	110	5770	5260	4750	14100	9600	4200
	6	110	6590	6015	5000	15000	9600	4200
	8	110	7000	6000	5000	15000	9600	4200
225 SM_	2	110	5170	4760	3700	11000	7000	3000
	4	140	6520	4900	2800	9300	5750	2200
	6	140	7000	4900	2800	9300	5750	2200
	8	140	7000	4900	2800	9300	5750	2200
250 SM_	2	140	3200	3050	2900			
	4	140	3000	2900	2800			
	6	140	3000	2900	2800			
	8	140	3000	2900	2800			

1. If the radial force is applied between points X_0 and X_1, the permissible force F_R can be calculated from the following formula:

$$F_R = F_{X0} - \frac{X}{0.5 \times E}(F_{X0} - F_{X1}) \text{ , } 0 \leq X \leq 0.5 \times E$$

2. If the radial force is applied between points X_1 and X_{max}, the permissible force F_R can be calculated from the following formula:

$$F_R = F_{X1} - \frac{X - 0.5 \times E}{0.5 \times E}(F_{X1} - F_{Xmax}) \text{ , } 0.5 \times E \leq X \leq E$$

E = length of shaft extension in basic version
X_1 = E/2

Permissible axial forces (acc. to L_{10}-principle)

Mounting arrangement IM B3

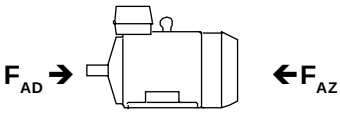

Motor size	20.000 hrs 2-pole F_{AD} N	2-pole F_{AZ} N	4-pole F_{AD} N	4-pole F_{AZ} N	6-pole F_{AD} N	6-pole F_{AZ} N	8-pole F_{AD} N	8-pole F_{AZ} N	40.000 hrs 2-pole F_{AD} N	2-pole F_{AZ} N	4-pole F_{AD} N	4-pole F_{AZ} N	6-pole F_{AD} N	6-pole F_{AZ} N	8-pole F_{AD} N	8-pole F_{AZ} N
71	270	270	350	350	440	440	1)	1)	1)	1)	1)	1)	1)	1)	1)	1)
80	400	400	510	510	590	590	1)	1)	1)	1)	1)	1)	1)	1)	1)	1)
90	450	450	560	560	640	640	1)	1)	1)	1)	1)	1)	1)	1)	1)	1)
100	620	620	780	780	890	890	1)	1)	1)	1)	1)	1)	1)	1)	1)	1)
112	810	810	1020	1020	1170	1170	1)	1)	1)	1)	1)	1)	1)	1)	1)	1)
132 S_	980	980	1220	1220	1400	1400	1)	1)	1)	1)	1)	1)	1)	1)	1)	1)
132 M_	980	980	1210	1210	1400	1400	1)	1)	1)	1)	1)	1)	1)	1)	1)	1)
160	2550	1890	3310	2650	3890*	3230	4360*	3700	1960	1300	2520	1860	2960	2300	3310	2650
180	2930	2270	3810	3150	4480*	3810	5030*	4370	2240	1580	2890	2230	3390	2700	3810	3140
200	3900	2940	5080	4120	5930*	4970	6650*	5700	2990	2030	3870	2910	4510	3550	5050	4090
225	4370	3250	5680	4570	6640*	5530	7450*	6340	3350	2240	4330	3220	5050	3930	5650	4540
250	5650	3340	7260	4950	8420*	6100	9400*	7100	4400	2100	5610	3300	6460	4160	7200	4900
280	7300	5300	8000	6000	9000	7000	10000	8000	5750	3750	6200	4200	6900	4900	7700	5700
315	7000	5000	9000	7000	10600	8600	11600	9600	5600	3600	6900	4900	7900	5900	8900	6900
355 2)	10500	3500	13500	6500	15300	8300	16800	9800	8750	1750	10800	3800	12000	5000	13300	6300
400 M_ 2)	10500	3500	13500	6500	15300	8300	16800	9800	8750	1750	10800	3800	12000	5000	13300	6300
400 LK_ 2)	10100	3200	13000	6000	15000	8000	16500	9500	8350	1350	10200	3250	11800	4800	13000	6000

1) On request
2) The values for sizes 355 and 400 are valid for non-sparking and increased safety M2BA motors. Values for flameproof motors M2JA and M2KA are available on request.

* Axial forces FAD assume locked D-bearing by means of locking ring.

Mounting arrangement IM V1

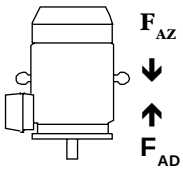

Motor size	20.000 hrs 2-pole F_{AD} N	2-pole F_{AZ} N	4-pole F_{AD} N	4-pole F_{AZ} N	6-pole F_{AD} N	6-pole F_{AZ} N	8-pole F_{AD} N	8-pole F_{AZ} N	40.000 hrs 2-pole F_{AD} N	2-pole F_{AZ} N	4-pole F_{AD} N	4-pole F_{AZ} N	6-pole F_{AD} N	6-pole F_{AZ} N	8-pole F_{AD} N	8-pole F_{AZ} N
71	290	260	380	330	460	420	1)	1)	1)	1)	1)	1)	1)	1)	1)	1)
80	430	390	540	490	620	560	1)	1)	1)	1)	1)	1)	1)	1)	1)	1)
90	480	420	610	520	700	600	1)	1)	1)	1)	1)	1)	1)	1)	1)	1)
100	680	580	880	740	990	840	1)	1)	1)	1)	1)	1)	1)	1)	1)	1)
112	890	760	1140	950	1280	1100	1)	1)	1)	1)	1)	1)	1)	1)	1)	1)
132 S_	1100	910	1390	1120	1580	1300	1)	1)	1)	1)	1)	1)	1)	1)	1)	1)
132 M_	1100	910	1430	1080	1680	1260	1)	1)	1)	1)	1)	1)	1)	1)	1)	1)
160	2900	1660	3820	2320	4400*	2900	4880*	3370	2300	1060	3020	1530	3460	1960	3820	2310
180	3370	1970	4510	2680	5200*	3350	5740*	3910	2680	1280	3590	1760	4110	2260	4510	2680
200	4560	2500	5940	3550	6950*	4310	7670*	5040	3650	1590	4720	2330	5510	2880	6060	3420
225	5240	2670	6770	3850	7910*	4700	8740*	5500	4210	1640	5410	2490	6300	3100	6930	3690
250	6700	2630	8590	4080	10100*	5000	11100*	6000	5450	1380	6920	2410	8130	3040	8890	3780
280	8500	4300	9500	4600	11000	5500	12200	6600	6950	2700	7700	2800	8900	3350	9750	4200
315 SM_	9000	3700	11600	5400	13500	6200	14500	7500	7450	2100	9450	3200	10900	3650	11900	4650
315 ML_	9600	3400	12400	5000	14800	5600	16200	7000	8100	1850	10100	2850	12200	3150	13200	4150
355 S_ 2)	14100	1600	18500	3800	21200	5000	23000	6800	12200	1)	15700	10000	18000	1750	19400	3100
355 SM_ 2)	14900	800	19200	3100	22200	4100	24000	5800	13000	1)	16400	1)	18900	850	20300	2100
355 ML_ 2)	15000	1)	19800	1700	23100	2500	25000	4300	13100	1)	17000	1)	19800	1)	21300	1)
400 M_ 2)	15000	1)	19800	1700	23100	2500	25000	4300	13100	1)	17000	1)	19800	1)	21300	1)
400 LK_ 2)	17300	1)	21800	1)	24300	1000	26200	2500	15400	1)	18900	1)	21100	1)	22500	1)

1) On request
2) The values for sizes 355 and 400 are valid for non-sparking and increased safety M2BA motors. Values for flameproof motors M2JA and M2KA are available on request.

* Axial forces FAD assume locked D-bearing by means of locking ring.

Flameproof motors EEx d and EEx de

Range

Range	Standards	Motor sizes	Output
Flameproof EEx d IIB/IIC T1 - T6	EN 50014, 50018	80 - 400	0.55 - 630 kW
Flameproof EEx de IIB/IIC T1 - T6	EN 50014, 50018, 50019	80 - 400	0.55 - 630 kW

Terminal box, general

Terminal boxes are mounted on the top of the basic versions of flameproof motors. The terminal box of motor sizes 80 to 250 can be turned 4 x 90° and by motor sizes 280 to 400 2x 180° after the delivery; to allow cable entry from either side of the motor. In motor sizes 280 to 400 the position of terminal box has to be defined when ordering by 4 x 90°.

The terminal box can be equipped with cable glands or from motor size 280 with cable boxes. Terminations are suitable for Cu- and Al-cables. For a horizontal mounted motor the cable entry is normally located on the right-hand side, seen from D-end, for other positions see variant codes.
Protection class is IP 55.

Flameproof terminal box (EEx d-motor)

The flameproof terminal box complies with the requirements of this enclosure type and effectively stops the transmission of an internal explosion to the surrounding, potentially explosive atmosphere.

To maintain the integrity of this enclosure, connections must be made in accordance with the safety standards applicable to this type of terminal box. Furthermore, sealing must be selected corresponding to the type of supply cable used.

Cable entries

Unless otherwise specified, motors are delivered **without** cable glands with threaded cable entries for flameproof cable gland according to the table below. In frame sizes 100 to 400, the terminal box has two main cable entries with metric thread, one plugged with a flameproof metal plug. The auxiliary cable entry is also with metric thread, plugged with a flameproof metal plug. NPT threads are available on request. During the transition period from NPT to metric threads please check when ordering.

Metric threads (as standard)

Motor size	Main cable entries			Auxiliary cable entries (heaters, thermistors etc.)		
	Thread	Metal plug	Outer cable sheath [1], mm	Thread	Metal plug	Outher cable sheath [1], mm
80 - 90	1 x M25 x1.5	–	12 - 20.5	1 x M20	1 x M20	8.5 - 16
100 - 132	2 x M32 x1.5	1 x M32	12 - 21	1 x M20	1 x M20	8.5 - 16
160 - 180	2 x M40 x1.5	1 x M40	16 - 27.5	2 x M20	2 x M20	8.5 - 16
200 - 250	2 x M50 x1.5	1 x M50	21 - 34	2 x M20	2 x M20	8.5 - 16
280	2 x M63 x1.5	1 x M63	33 - 48	2 x M20	2 x M20	8.5 - 16
315	2 x M75 x1.5	1 x M75	47 - 65	2 x M20	2 x M20	8.5 - 16
355 - 400	2 x M75 x1.5	1 x M75	47 - 65	2 x M20	2 x M20	8.5 - 16

[1] Depending on cable gland type

NPT threads as option, variant code 730 = Prepared for NPT cable glands

Motor size	Main cable entries			Auxiliary cable entries (heaters, thermistors etc.)	
	Thread	NPT plug	Max. possible thread size	Thread	NPT plug
80-112	1x3/4"	–	1 or 2x1"	1x3/4"	1x3/4"
132	2x3/4"	1x3/4"	1 or 2x1"	1x3/4"	1x3/4"
160-180	2x1 1/4"	1x1 1/4"	1 or 2x1 1/2"	2x3/4"	2x3/4"
200-250	2x1 1/2"	1x1 1/2"	1 or 2x2"	2x3/4"	2x3/4"
280	2x2"	1x2"	1 or 2x3"	1x3/4"	1x3/4"
315	2x3"	1x3"	1 or 2x3"	1x3/4"	1x3/4"
355-400	2x3"	1x3"	1 or 2x4"	1x3/4"	1x3/4"

Supply of cable glands (EEx d)

Cable glands are either fitted to the motor, or delivered loose to avoid damage during transport. For ordering, see variant codes. Other types are available on request. Unless otherwise specified when ordering cable glands, and when data on the cables have not been provided when ordering, the cable glands listed below will be delivered. The unused opening is closed with a flameproof metal plug.

Variant code: 733 Standard cable gland EEx d IIB, non-armoured cable
735 Standard cable gland EEx d IIC, non-armoured cable

Motor size	Main cable entries					Auxiliary cable entries (heaters, thermistors etc.)			
	Thread	Gland	Closing plug	Outer cable diameter [1], mm IIB	IIC	Thread	Gland	Outer cable diameter [1], mm IIB	IIC
80 - 90	1xM25	1xM25	–	12 - 20.5	11 - 20	1xM20	1xM20	8.5 - 16	7 - 15
100 - 132	2xM32	1xM32	1xM32	12 - 21	16 - 27.5	1xM20	2xM20	8.5 - 16	7 - 15
160 - 180	2xM40	1xM40	1xM40	16 - 27.5	22 - 33	2xM20	2xM20	8.5 - 16	7 - 15
200 - 250	2xM50	1xM50	1xM50	21 - 34	30 - 44	2xM20	2xM20	8.5 - 16	7 - 15
280	2xM63	1xM63	1xM63	33 - 48	40 - 57	2xM20	2xM20	8.5 - 16	7 - 15
315 - 400	2xM75	1xM75	1xM75	47 - 65	56 - 68	2xM20	2xM20	8.5 - 16	7 - 15

[1] Depending on cable gland type

Variant code: 732 Standard cable gland EEx d IIB, armoured cable
734 Standard cable gland EEx d IIC, armoured cable

Motor size	Main cable entries							Auxiliary cable entries (heaters, thermistors etc.)					
	Thread	Gland	Closing plug	Inner cable sheath[1] mm IIB	IIC	Outer cable sheath[1] mm IIB	IIC	Thread	Gland	Inner cable sheath[1] mm IIB	IIC	Outer cable sheath[1] mm IIB	IIC
80 - 90	1xM25	1xM25	–	12-20.5	11-20	16-27.5	18-27.5	1xM20	1xM20	8.5-16	7-15	12-21	13-21
100 - 132	2xM32	1xM32	1xM32	12-21	16-27.5	16-27.5	23.5-33.5	1xM20	1xM20	8.5-16	7-15	12-21	13-21
160 - 180	2xM40	1xM40	1xM40	16-27.5	22-33	21-34	29-40.5	2xM20	2xM20	8.5-16	7-15	12-21	13-21
200 - 250	2xM50	1xM50	1xM50	21-34	30-44	27-41	40-53	2xM20	2xM20	8.5-16	7-15	12-21	13-21
280	2xM63	1xM63	1xM63	33-48	40-57	40-56	51-66	2xM20	2xM20	8.5-16	7-15	12-21	13-21
315 - 400	2xM75	1xM75	1xM75	47-65	56-68	54-74	64-78	2xM20	2xM20	8.5-16	7-15	12-21	13-21

[1] Depending on cable gland type

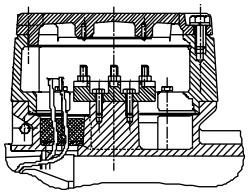

Terminal box for motors M2JA 80 - 132

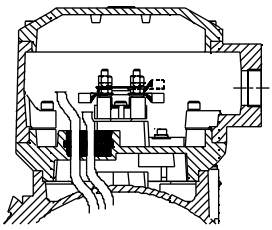

Terminal box for motors M3JP 200 - 250

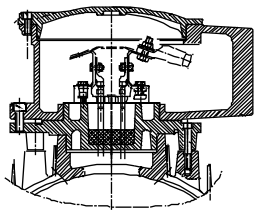

Terminal box for motors M2JA 280 - 355

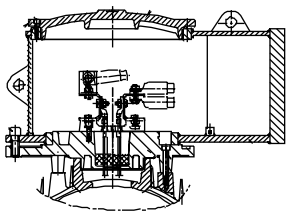

Terminal box for motors M2JA 355 - 400

Increased safety terminal box (EEx de-motors)

As an alternative, an increased safety terminal box can be delivered with a flameproof motor enclosure. The certificate of approval for the flameproof motors also covers this application, referred to as EEx de.

The increased safety terminal box complies with the requirements of this type of enclosure and prevents all ignition sources such as sparks, excessive overheating etc. The features of the terminal box are: no self-loosening terminals, compliance with creepage distances and clearances specified in standards and cable gland with cable clamping.

Cable entries

Motor sizes 80 to 132 are delivered **without** cable glands but are delivered with threaded cable entries suitable for the following cable glands as standard. Motor sizes 160 to 400 are delivered **with** cable glands according to the table below as standard.

In frame sizes 100 to 132 the terminal box has two main cable entries with metric thread, one plugged with a metal plug. In frame sizes 160 to 250 the terminal box has also two main cable entries with metric threads; both are equipped with cable glands of a closed type. In frame sizes 280 to 400 the terminal box has two main metric cable glands, one with a metal plug. The auxiliary cable entries are also plugged with metric cable plugs.

Motor size	**Main cable entries**				**Auxiliary cable entries** (heaters, thermistors etc.)			
	Thread	Cable gland	Metal plug	Outer cable sheath [1], mm	Thread	Cable gland	Metal plug	Outher cable sheath [1], mm
80 - 90	1 x M25 x1.5	–	–	10 - 16	1 x M20	–	1 x M20	8 - 14
100 - 132	2 x M32 x1.5	–	1xM32	14 - 21	1 x M20	–	1 x M20	8 - 14
160 - 180	2 x M40 x1.5	2xM40x1.5	–	18 - 27	2 x M20	–	2 x M20	8 - 14
200 - 250	2 x M50 x1.5	2xM50x1.5	–	26 - 35	2 x M20	–	2 x M20	8 - 14
280	2 x M63 x1.5	1 x M63	1 x M63	32 - 49	2 x M20	2 x M20	–	8 - 14
315	2 x M63 x1.5	1 x M63	1 x M63	32 - 49	2 x M20	2 x M20	–	8 - 14
355 - 400	See tables on next pages.							

[1] Depending on cable gland type

Supply of cable glands (EEx de)

Cable glands are either fitted to the motor, or delivered loose to avoid damage during transport. For ordering, see variant codes.

Unless otherwise specified when ordering cable glands, and when data on the cables have not been provided when ordering, the cable glands listed below will be delivered. Other types are available on request.

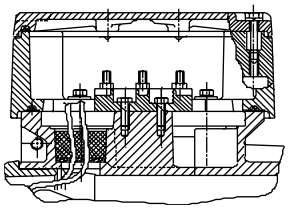

Terminal box for motors M2KA 80 - 132

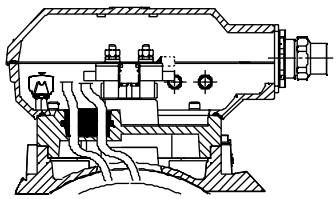

Terminal box for motors M3KP 160 - 250

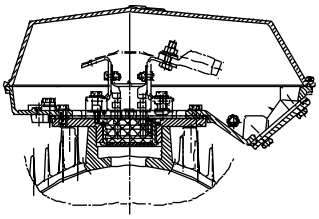

Terminal box for motors M2KA 280 - 355

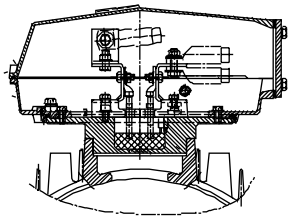

Terminal box for motors M2KA 355 - 400

Flameproof motors M2KA 280-400

M2KA 280-400 motors with top-mounted terminal box

Motor size	Flange or adapter	Cable box or cable gland	Gland thread	Cable diameter	Max. connection cable area mm²	Terminal bolt size	Voltage/ frequency code
3000 r/min (2 poles)							
280	3GZF 294 730-749	2x 3GZF 294 730-613	**2x M63x1.5**	2x Ø32-49	2x150	M12	
315	3GZF 294 730-753	2x 3GZF 294 730-613	**2x M63x1.5**	2x Ø32-49	2x240	M12	
355 S	MPMM-ZL1	3GZF 294 730-301		2x Ø48-60	4x240	M12	D
	-	3GZF 294 730-301		2x Ø48-60	2x240	M12	E
355 SM_	MPMM-ZL1	3GZF 294 730-301		2x Ø48-60	4x240	M12	
355 ML_	MPMM-ZL1	LNPB 3328		2x Ø60-80	4x240	M12	
400 M_	MPMM-ZL1	LNPB 3328		2x Ø60-80	4x240	M12	
400 LK_	MPMM-ZL1	LNPB 3328		2x Ø60-80	4x240	M12	
1500 r/min (4 poles)							
280	3GZF 294 730-749	2x 3GZF 294 730-613	**2x M63x1.5**	2x Ø32-49	2x150	M12	
315	3GZF 294 730-753	2x 3GZF 294 730-613	**2x M63x1.5**	2x Ø32-49	2x240	M12	
355 S	MPMM-ZL1	3GZF 294 730-301		2x Ø48-60	4x240	M12	D
	-	3GZF 294 730-301		2x Ø48-60	2x240	M12	E
355 SM_	MPMM-ZL1	3GZF 294 730-301		2x Ø48-60	4x240	M12	
355 ML_	MPMM-ZL1	LNPB 3328		2x Ø60-80	4x240	M12	
400 M_	MPMM-ZL1	LNPB 3328		2x Ø60-80	4x240	M12	
400 LKA	MPMM-ZL1	LNPB 3328		2x Ø60-80	4x240	M12	D
	MPMM-ZL1	LNPB 3328		2x Ø60-80	4x240	M12	E
400 LKB, LKC	MPMM-ZL1	LNPB 3328		2x Ø60-80	4x240	M12	
1000 r/min (6 poles)							
280	3GZF 294 730-749	2x 3GZF 294 730-613	**2x M63x1.5**	2x Ø32-49	2x150	M12	
315	3GZF 294 730-753	2x 3GZF 294 730-613	**2x M63x1.5**	2x Ø32-49	2x240	M12	
355 S, SMA	-	3GZF 294 730-301		2x Ø48-60	2x240	M12	
355 SMB	MPMM-ZL1	3GZF 294 730-301		2x Ø48-60	4x240	M12	D
	-	3GZF 294 730-301		2x Ø48-60	2x240	M12	E
355 ML_	MPMM-ZL1	3GZF 294 730-301		2x Ø48-60	4x240	M12	
400 M	MPMM-ZL1	LNPB 3328		2x Ø60-80	4x240	M12	D
	-	3GZF 294 730-301		2x Ø48-60	2x240	M12	E
400 MA, MB	MPMM-ZL1	LNPB 3328		2x Ø60-80	4x240	M12	
400 LKA	MPMM-ZL1	LNPB 3328		2x Ø60-80	4x240	M12	
400 LKB, LKC	MPMM-ZL1	LNPB 3328		2x Ø60-80	4x240	M12	D
	MPMM-ZL1	LNPB 3328		2x Ø60-80	4x240	M12	E
750 r/min (8 poles)							
280	3GZF 294 730-749	2x 3GZF 294 730-613	**2x M63x1.5**	2x Ø32-49	2x150	M12	
315	3GZF 294 730-753	2x 3GZF 294 730-613	**2x M63x1.5**	2x Ø32-49	2x240	M12	
355 S, SMA	-	3GZF 294 730-301		2x Ø48-60	2x240	M12	
355 MLA	-	3GZF 294 730-301		2x Ø48-60	2x240	M12	
355 MLC	MPMM-ZL1	3GZF 294 730-301		2x Ø48-60	4x240	M12	D
	-	3GZF 294 730-301		2x Ø48-60	2x240	M12	E
400 M	-	3GZF 294 730-301		2x Ø48-60	2x240	M12	D
400 MA	MPMM-ZL1	3GZF 294 730-301		2x Ø48-60	4x240	M12	D
	-	3GZF 294 730-301		2x Ø48-60	2x240	M12	E
400 LK_	MPMM-ZL1	LNPB 3328		2x Ø60-80	4x240	M12	

Voltage/frequency codes:
D - 380-420 VΔ 50 Hz, 660-690 VY 50 Hz, 440-480 VΔ 60 Hz
E - 500 VΔ 50 Hz, 575 VΔ 60 Hz

Examples:

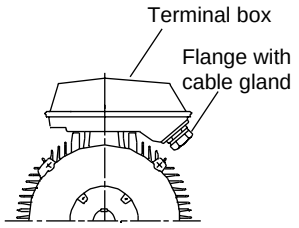

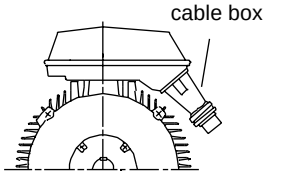

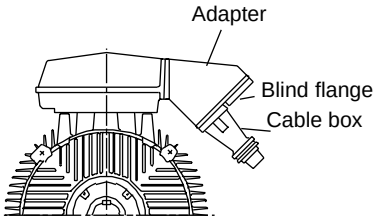

Auxiliary devices (view from N-end):

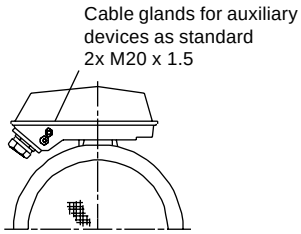

Notes:

Technical data – Flameproof motors

M2JA/M3JP EEx d IIB/IIC T4
M2KA/M3KP EEx de IIB/IIC T4

IP 55, IC 411; Insulation class F, temperature rise class B

Output kW	De-sign	Type designation	Product code	Speed r/min	Efficiency FL 100%	Efficiency 3/4 75%	Power factor cos φ	Current I_N A	Current I_s/I_N	Torque T_N Nm	Torque T_s/T_N	Torque T_{max}/T_N	Moment of inertia J=1/4 GD² kgm²	Weight EEx d kg	Weight EEx de kg	Sound pressure level L_P dB(A)
3000 r/min = 2 poles				**400 V 50 Hz [1)]**												
		M2JA/M2KA	3GJA/3GKA													
0.75		**80 LS**	081 310-••B	2905	75.5	79.3	0.70	2.2	8.2	2.5	4.0	3.5	0.0009	24	24	59
1.1		**80 L**	081 320-••B	2850	78.3	77.5	0.82	2.6	6.4	3.7	2.5	2.9	0.0009	24	24	59
1.5		**90 S**	091 110-••B	2880	80.1	81.9	0.86	3.3	6.7	5	2.3	2.8	0.0019	32	32	65
2.2		**90 L**	091 510-••B	2880	83.0	84.0	0.88	4.6	7.6	7.3	2.7	3.3	0.0024	37	37	65
3		**100 L**	101 510-••B	2910	84.8	84.5	0.88	6.1	7.7	9.8	2.6	3.4	0.0041	45	45	66
4		**112 M**	111 310-••B	2900	84.8	86.2	0.90	7.7	7.2	13.2	2.4	3.1	0.005	46	46	67
5.5		**132 SA**	131 110-••B	2855	84.5	84.8	0.89	10.6	6.5	18.4	3.2	3.5	0.014	69	69	69
7.5	[2)]	**132 SB**	131 120-••B	2855	86.3	87.0	0.90	14.7	8.5	25	3.4	3.5	0.016	79	79	69
		M3JP/M3KP	3GJP/3GKP													
11		**160 MLA**	161 410-••G	2936	91.2	91.1	0.87	20	7.2	36	2.9	3.3	0.039	153	147	71
15		**160 MLB**	161 420-••G	2934	91.6	91.5	0.88	28	7.5	49	3.1	3.5	0.047	162	156	71
18.5		**160 MLC**	161 430-••G	2934	92.4	92.5	0.90	33	7.5	60	2.8	3.4	0.054	173	167	71
22	**HO**	**160 MLD**	161 440-••G	2929	91.4	91.3	0.90	39	7.4	72	2.8	3.4	0.059	179	173	77
22		**180 MLA**	181 410-••G	2938	92.6	92.7	0.90	39	6.9	72	2.5	3.1	0.077	200	194	71
30	**HO**	**180 MLB**	181 420-••G	2944	92.8	92.7	0.88	54	7.5	97	2.8	3.5	0.092	216	210	78
30		**200 MLA**	201 410-••G	2946	94.0	94.1	0.88	54	7.4	97	3.0	3.2	0.15	310	290	72
37		**200 MLC**	201 430-••G	2948	94.1	94.0	0.89	65	7.6	120	2.9	3.2	0.19	340	320	75
45		**225 SMB**	221 220-••G	2968	94.7	94.6	0.87	79	7.2	145	2.7	3.0	0.26	400	380	76
55	**HO**	**225 SMC**	221 230-••G	2965	94.3	94.0	0.88	96	7.1	177	2.6	3.0	0.29	420	400	80
55		**250 SMA**	251 210-••G	2970	94.6	94.3	0.88	96	7.7	177	2.4	3.1	0.49	460	440	75
75	**HO**	**250 SMB**	251 220-••G	2969	95.1	95.0	0.89	129	7.9	241	2.6	3.2	0.57	500	480	80
		M2JA/M2KA	3GJA/3GKA													
75		**280 SMA**	281 210-••A	2977	94.9	94.3	0.88	131	7.5	241	2.3	3.3	0.8	590	590	77
90		**280 SMB**	281 220-••A	2975	95.1	94.6	0.90	152	7.4	289	2.3	2.9	0.9	630	630	77
110	**HO**	**280 SMC**	281 230-••A	2977	95.8	95.4	0.90	184	7.9	353	2.4	3.0	1.15	690	690	77
110		**315 SMA**	311 210-••A	2982	95.1	94.4	0.86	194	7.6	352	2.0	3.0	1.2	880	880	80
132		**315 SMB**	311 220-••A	2982	95.4	94.9	0.88	228	7.4	423	2.2	3.0	1.4	940	940	80
160		**315 SMC**	311 230-••A	2981	96.1	95.6	0.89	269	7.5	513	2.3	3.0	1.7	1130	1130	80
200		**315 MLA**	311 410-••A	2978	96.3	95.9	0.90	334	7.8	641	2.6	3.0	2.1	1190	1190	80
250		**355 S**	351 100-••A	2980	96.1	95.7	0.92	410	6.6	801	1.3	3.0	3.8	1550	1550	83
315		**355 SMA**	351 210-••A	2978	96.6	96.4	0.92	510	7.7	1010	1.3	3.3	4.8	1750	1750	83
400		**355 MLA**	351 410-••A	2982	96.6	96.4	0.92	655	7.7	1281	1.6	3.3	6	2150	2150	83
450	[2)]	**355 MLC**	351 430-••A	2977	96.6	96.4	0.92	730	7.8	1444	1.2	3.2	6	2150	2150	83
400		**400 M**	401 300-••A	2982	96.6	96.4	0.92	655	7.7	1281	1.6	3.3	6	2200	2200	83
450	[2)]	**400 MA**	401 310-••A	2977	96.6	96.4	0.92	730	7.8	1444	1.2	3.2	6	2200	2200	83
500	[2)]	**400 LKA**	401 510-••A	2980	96.6	96.5	0.93	795	7.0	1602	0.8	2.8	7.5	2850	2850	85
560	[2)]	**400 LKB**	401 520-••A	2983	96.7	96.5	0.92	910	7.3	1793	0.7	3.4	8.5	2900	2900	85

[1)] Motors are certified for the voltages 380-400-415 V 50 Hz according to IEC 34-1. Values above are given for 400 V 50 Hz; data for other voltages on request.

[2)] Temperature rise class F

Design HO = High-output design. The output of these motors is one step higher than the basic with rated outputs in accordance with CENELEC.

Notes:
- **When ordering sizes 160-200 with lifetime lubrication, variant code 195 'Bearings greased for life' has to be added**
- **When ordering IIC motors, following variant code has to be added: 461 = EEx d, EEx de design, Group IIC**

Data for other voltages and frequencies; and for surface temperature T5 on request.

2- and 4-pole Cenelec motors sizes 160-250 can be used at ambient 50°C in temperature rise max. 75 K (cl. F); for more information contact us.

The two bullets in the product code indicate choice of mounting arrangement (see ordering information), voltage and frequency (below).

S	D	A [a)]	B [a)]	E	F [b)]	X
380 VY 50 Hz 400 VY 50 Hz 415 VY 50 Hz 220 VΔ 50 Hz	380 VΔ 50 Hz 400 VΔ 50 Hz 415 VΔ 50 Hz 660 VY 50 Hz	380 VY 50 Hz 220 VΔ 50 Hz	380 VΔ 50 Hz 660 VY 50 Hz	500 VΔ 50 Hz 575 VΔ 60 Hz	500 VY 50 Hz	Other rated voltage, connection or frequency, max. 690 V
		G [a)]	**H [a)]**	**T [b)]**	**U [b)]**	
230 VΔ 50 Hz 440 VY 60 Hz	690 VY 50 Hz 440 VΔ 60 Hz	415 VY 50 Hz	415 VΔ 50 Hz	660 VΔ 50 Hz	690 VΔ 50 Hz	

[a)] On request for motor sizes 315-400. [b)] On request for motor sizes 355-400.

Technical data – Flameproof motors

M2JA/M3JP EEx d IIB/IIC T4
M2KA/M3KP EEx de IIB/IIC T4

IP 55, IC 411; Insulation class F, temperature rise class B

Output kW	De-sign	Type designation	Product code	Speed r/min	Efficiency FL 100%	Efficiency 3/4 75%	Power factor cos φ	Current I_N A	Current I_s/I_N	Torque T_N Nm	Torque T_s/T_N	Torque T_{max}/T_N	Moment of inertia J=1/4 GD² kgm²	Weight EEx d kg	Weight EEx de kg	Sound pressure level L_P dB(A)
1500 r/min = 4 poles				**400 V 50 Hz [1)]**												
		M2JA/M2KA	3GJA/3GKA													
0.55		**80 LS**	082 310-••B	1440	76.2	76.9	0.62	1.7	6.1	3.6	3.2	3.4	0.002	24	24	45
0.75		**80 L**	082 320-••B	1405	77.0	78.1	0.77	2	5.2	5	2.7	2.9	0.002	24	45	45
1.1		**90 S**	092 110-••B	1420	76.0	77.3	0.79	2.7	4.3	7.4	2.0	2.5	0.0032	32	54	54
1.5		**90 L**	092 510-••B	1420	77.8	77.4	0.78	3.5	4.9	10.1	2.6	3.0	0.0043	36	54	54
2.2		**100 LA**	102 510-••B	1435	81.2	80.8	0.81	4.8	6.3	14.6	2.4	2.4	0.0069	44	52	52
3		**100 LB**	102 520-••B	1435	82.7	80.8	0.80	6.5	6.7	20	2.7	2.9	0.0082	47	52	52
4	[2)]	**112 M**	112 310-••B	1440	82.8	83.0	0.80	9.5	6.3	27	3.0	3.1	0.01	51	60	60
5.5		**132 S**	132 110-••B	1450	86.1	84.7	0.84	11.3	7.2	36.1	2.2	3.0	0.031	79	59	59
7.5	[2)]	**132 M**	132 310-••B	1450	86.0	86.4	0.85	15.5	7.9	49.3	2.6	3.4	0.038	82	59	59
		M3JP/M3KP	3GJP/3GKP													
11		**160 MLC**	162 430-••G	1470	91.3	91.3	0.82	22.5	7.7	71	3.1	3.6	0.09	172	166	65
15		**160 MLE**	162 450-••G	1467	92.0	92.0	0.83	30	7.6	98	3.1	3.6	0.121	195	189	67
18.5	**HO**	**160 MLF**	162 460-••G	1466	92.0	92.0	0.82	36.5	8.0	120	3.2	3.6	0.121	195	189	68
18.5		**180 MLA**	182 410-••G	1474	92.5	92.6	0.82	36	7.3	120	2.7	3.2	0.176	212	206	62
22		**180 MLB**	182 420-••G	1471	92.6	92.7	0.82	42	7.1	143	2.6	3.0	0.191	220	214	62
30	[2)] **HO**	**180 MLC**	182 430-••G	1473	92.3	92.3	0.80	59	7.8	194	3.1	3.4	0.239	239	233	66
30		**200 MLB**	202 420-••G	1475	93.5	93.6	0.84	56	7.4	194	3.3	3.0	0.34	340	320	61
37	**HO**	**200 MLC**	202 430-••G	1475	93.3	93.3	0.82	70	7.5	239	3.5	3.2	0.34	340	320	73
37		**225 SMB**	222 220-••G	1480	93.6	93.4	0.84	69	7.7	239	3.1	3.1	0.42	390	370	67
45		**225 SMC**	222 230-••G	1477	94.4	94.4	0.86	81	7.4	291	3.1	3.0	0.49	425	405	67
55	**HO**	**225 SMD**	222 240-••G	1476	94.0	93.9	0.85	100	7.6	356	3.3	3.1	0.49	425	405	74
55		**250 SMA**	252 210-••G	1479	94.6	94.7	0.83	101	6.9	355	2.5	3.1	0.72	450	430	66
75	**HO**	**250 SMB**	252 220-••G	1476	94.7	94.9	0.86	133	7.2	485	2.7	3.2	0.88	505	485	73
		M2JA/M2KA	3GJA/3GKA													
75		**280 SMA**	282 210-••A	1484	95.0	95.0	0.86	135	6.9	483	2.6	2.8	1.25	590	590	68
90		**280 SMB**	282 220-••A	1483	95.2	95.2	0.87	158	7.2	580	2.6	2.7	1.5	630	630	68
110	**HO**	**280 SMC**	282 230-••A	1484	95.6	95.6	0.87	194	7.7	708	3.0	3.0	1.85	690	690	68
110		**315 SMA**	312 210-••A	1487	95.6	95.4	0.87	192	7.2	706	2.0	2.5	2.3	890	890	70
132		**315 SMB**	312 220-••A	1487	95.8	95.6	0.87	232	7.1	848	2.3	2.7	2.6	945	945	70
160		**315 SMC**	312 230-••A	1486	96.0	95.9	0.86	282	7.2	1028	2.4	2.9	2.9	990	990	70
200		**315 MLA**	312 410-••A	1486	96.2	96.2	0.86	351	7.2	1285	2.5	2.9	3.5	1100	1100	70
250		**355 S**	352 100-••A	1487	96.5	96.4	0.87	430	7.2	1606	2.3	2.7	6.5	1550	1550	80
315		**355 SMA**	352 210-••A	1488	96.7	96.6	0.87	545	7.6	2022	2.5	2.9	8.2	1800	1800	80
355		**355 SMB**	352 220-••A	1486	96.7	96.7	0.87	610	6.8	2281	2.2	2.6	8.2	1800	1800	80
400		**355 MLA**	352 410-••A	1489	96.8	96.8	0.87	685	6.9	2565	1.6	2.8	10	2100	2100	80
450	[2)]	**355 MLB**	352 420-••A	1489	96.8	96.8	0.87	770	7.6	2886	1.5	3.0	10	2100	2100	80
500		**355 MLC**	352 430-••A	1489	96.8	96.8	0.88	845	7.6	3207	1.3	2.9	10.5	2100	2100	83
400		**400 M**	402 300-••A	1489	96.8	96.8	0.87	685	6.9	2565	1.6	2.8	10	2150	2150	80
450	[2)]	**400 MA**	402 310-••A	1489	96.8	96.8	0.87	770	7.6	2886	1.5	3.0	10	2150	2150	80
500		**400 MB**	402 320-••A	1489	96.8	96.8	0.88	845	7.6	3207	1.3	2.9	10.5	2150	2150	83
560		**400 LKA**	402 510-••A	1489	96.9	96.9	0.90	925	6.6	3591	1.1	2.6	14	3050	3050	85
630		**400 LKB**	402 520-••A	1489	96.9	96.8	0.87	1080	6.9	4040	1.2	2.8	15	3150	3150	85

[1)] Motors are certified for the voltages 380-400-415 V 50 Hz according to IEC 34-1. Values above are given for 400 V 50 Hz; data for other voltages on request.

[2)] Temperature rise class F

Design HO = High-output design. The output of these motors is one step higher than the basic with rated outputs in accordance with CENELEC.

Notes:
- **When ordering sizes 160-200 with lifetime lubrication, variant code 195 'Bearings greased for life' has to be added**
- **When ordering IIC motors, following variant code has to be added: 461 = EEx d, EEx de design, Group IIC**

Data for other voltages and frequencies; and for surface temperature T5 on request.

2- and 4-pole Cenelec motors sizes 160-250 can be used at ambient 50°C in temperature rise max. 75 K (cl. F); for more information contact us.

Technical data – Flameproof motors

M2JA/M3JP EEx d IIB/IIC T4
M2KA/M3KP EEx de IIB/IIC T4

IP 55, IC 411; Insulation class F, temperature rise class B

Output kW	De-sign	Type designation	Product code	Speed r/min	Efficiency FL 100%	Efficiency 3/4 75%	Power factor cos φ	Current I_N A	Current I_s/I_N	Torque T_N Nm	Torque T_s/T_N	Torque T_{max}/T_N	Moment of inertia J=1/4 GD² kgm²	Weight EEx d kg	Weight EEx de kg	Sound pressure level L_P dB(A)
1000 r/min = 6 poles				**400 V 50 Hz [1]**												
		M2JA/M2KA	3GJA/3GKA													
0.37		**80 LS**	083 310-••B	945	66.8	64.0	0.50	1.7	4.2	3.7	4.3	4.4	0.002	24	24	42
0.55		**80 L**	083 320-••B	910	67.0	69.2	0.62	2	3.8	5.7	2.8	2.9	0.002	24	24	42
0.75		**90 S**	093 110-••B	930	69.1	69.6	0.67	2.4	3.7	7.7	2.1	2.3	0.0032	32	32	44
1.1		**90 L**	093 510-••B	930	72.8	70.9	0.69	3.3	4.3	11.3	2.4	2.7	0.0043	37	37	44
1.5		**100 L**	103 510-••B	950	78.0	77.5	0.71	4.2	4.9	15.1	1.8	2.4	0.0082	47	47	47
2.2		**112 M**	113 310-••B	950	78.2	79.9	0.71	5.9	4.8	22.1	2.3	2.5	0.01	51	50	50
3		**132 S**	133 110-••B	960	83.6	81.1	0.75	7.1	6.4	29.8	2.4	3.1	0.031	79	79	61
4		**132 MA**	133 310-••B	960	84.8	85.2	0.78	8.9	7.1	40	2.6	2.8	0.038	82	82	61
5.5		**132 MB**	133 320-••B	955	84.8	85.7	0.78	12.2	6.9	55	2.8	2.8	0.045	96	96	61
		M3JP/M3KP	3GJP/3GKP													
7.5		**160 MLA**	163 410-••G	965	88.6	89.3	0.80	15.5	6.5	74	1.9	3.0	0.088	166	160	57
11		**160 MLB**	163 420-••G	966	89.2	89.9	0.79	23	7.1	109	2.1	3.3	0.106	179	173	65
15		**180 MLB**	183 420-••G	970	90.7	91.0	0.79	31	6.6	148	1.6	2.8	0.221	239	233	67
18.5		**200 MLA**	203 410-••G	983	91.3	91.4	0.80	37	7.1	180	3.2	3.1	0.37	300	280	66
22		**200 MLB**	203 420-••G	983	91.6	91.6	0.81	43	7.5	214	3.2	3.2	0.43	320	300	61
30	**HO**	**200 MLC**	203 430-••G	983	91.6	91.5	0.80	60	7.5	292	3.5	3.4	0.49	340	320	65
30		**225 SMB**	223 220-••G	985	92.8	92.8	0.81	58	7.4	291	3.4	3.0	0.64	385	365	61
37	**HO**	**225 SMC**	223 230-••G	983	92.8	92.9	0.83	70	7.1	359	3.2	2.8	0.75	415	395	64
37		**250 SMA**	253 210-••G	987	93.4	93.4	0.81	71	7.2	358	3.2	2.9	1.16	455	435	66
45	**HO**	**250 SMB**	253 220-••G	987	93.6	93.6	0.82	84	7.5	435	3.2	2.8	1.49	500	480	66
		M2JA/M2KA	3GJA/3GKA													
45		**280 SMA**	283 210-••A	990	94.5	94.5	0.84	82	6.9	434	2.5	2.5	1.85	570	570	66
55		**280 SMB**	283 220-••A	990	94.7	94.7	0.84	101	7.0	531	2.7	2.6	2.2	610	610	66
75	**HO**	**280 SMC**	283 230-••A	990	95.2	95.2	0.84	137	7.3	723	2.9	2.8	2.85	690	690	66
75		**315 SMA**	313 210-••A	992	95.0	94.7	0.82	141	7.4	722	2.4	2.8	3.2	840	840	68
90		**315 SMB**	313 220-••A	992	95.5	95.3	0.84	163	7.5	866	2.4	2.8	4.1	930	930	68
110		**315 SMC**	313 230-••A	991	95.6	95.5	0.83	202	7.4	1060	2.5	2.9	4.9	1000	1000	68
132		**315 MLA**	313 410-••A	991	95.8	95.7	0.83	240	7.5	1272	2.7	3.0	5.8	1120	1120	68
160		**355 S**	353 100-••A	992	95.9	95.7	0.85	280	6.8	1540	1.8	2.7	10.4	1550	1550	75
200		**355 SMA**	353 210-••A	992	95.9	95.7	0.85	355	7.1	1925	2.0	2.7	12.5	1800	1800	75
250		**355 SMB**	353 220-••A	992	96.0	95.8	0.84	450	7.5	2407	2.2	2.8	12.5	1800	1800	75
315		**355 MLA**	353 410-••A	991	96.2	96.1	0.84	565	7.3	3036	2.0	3.0	14.6	2100	2100	75
355		**355 MLC**	353 430-••A	991	96.4	96.3	0.84	635	7.6	3421	1.5	3.0	15.8	2100	2100	78
250		**400 M**	403 300-••A	992	96.0	95.8	0.84	450	7.5	2407	2.2	2.8	12.5	2000	2000	75
315		**400 MA**	403 310-••A	991	96.2	96.1	0.84	565	7.3	3036	2.0	3.0	14.6	2150	2150	75
355		**400 MB**	403 320-••A	991	96.4	96.3	0.84	635	7.6	3421	1.5	3.0	15.8	2150	2150	78
400		**400 LKA**	403 510-••A	992	96.5	96.4	0.85	700	6.4	3851	1.2	2.7	16.5	2800	2800	80
450		**400 LKB**	403 520-••A	993	96.5	96.4	0.85	790	6.8	4328	1.3	2.8	19	3050	3050	80
500 [2]		**400 LKC**	403 530-••A	992	96.5	96.4	0.85	880	6.8	4813	1.3	2.8	19	3050	3050	80

[1] Motors are certified for the voltages 380-400-415 V 50 Hz according to IEC 34-1. Values above are given for 400 V 50 Hz; data for other voltages on request.

[2] Temperature rise class F

Design HO = High-output design. The output of these motors is one step higher than the basic with rated outputs in accordance with CENELEC.

Notes:
- **When ordering sizes 160-200 with lifetime lubrication, variant code 195 'Bearings greased for life' has to be added**
- **When ordering IIC motors, following variant code has to be added: 461 = EEx d, EEx de design, Group IIC**

Data for other voltages and frequencies, and for surface temperature T5 on request.

The two bullets in the product code indicate choice of mounting arrangement (see ordering information), voltage and frequency (below).

S	D	A [a]	B [a]	E	F [b]	X
380 VY 50 Hz 400 VY 50 Hz 415 VY 50 Hz 220 VΔ 50 Hz 230 VΔ 50 Hz 440 VY 60 Hz	380 VΔ 50 Hz 400 VΔ 50 Hz 415 VΔ 50 Hz 660 VY 50 Hz 690 VY 50 Hz 440 VΔ 60 Hz	380 VY 50 Hz 220 VΔ 50 Hz	380 VΔ 50 Hz 660 VY 50 Hz	500 VΔ 50 Hz 575 VΔ 60 Hz	500 VY 50 Hz	Other rated voltage, connection or frequency, max. 690 V
		G [a]	**H [a]**	**T [b]**	**U [b]**	
		415 VY 50 Hz	415 VΔ 50 Hz	660 VΔ 50 Hz	690 VΔ 50 Hz	

[a] On request for motor sizes 315-400. [b] On request for motor sizes 355-400.

Technical data – Flameproof motors

M2JA/M3JP EEx d IIB/IIC T4
M2KA/M3KP EEx de IIB/IIC T4

IP 55, IC 411; Insulation class F, temperature rise class B

Output kW	De-sign	Type designation	Product code	Speed r/min	Efficiency FL 100%	Efficiency 3/4 75%	Power factor cos φ	Current I_N A	Current I_s/I_N	Torque T_N Nm	Torque T_s/T_N	Torque T_{max}/T_N	Moment of inertia J=1/4 GD² kgm²	Weight EEx d kg	Weight EEx de kg	Sound pressure level L_P dB(A)
750 r/min = 8 poles				**400 V 50 Hz [1)]**												
		M2JA/M2KA	3GJA/3GKA													
0.18		**80 LS**	084 310-••B	700	53.2	49.0	0.47	1.1	3.4	2.5	3.5	3.6	0.002	24	24	36
0.25		**80 L**	084 320-••B	690	57.5	53.0	0.52	1.3	3.1	3.5	2.5	2.6	0.002	24	24	36
0.37		**90 S**	094 110-••B	700	61.0	56.0	0.56	1.7	3.0	5	2.0	2.2	0.0031	32	32	36
0.55		**90 L**	094 510-••B	695	62.7	59.0	0.54	2.4	3.0	7.6	2.0	2.3	0.0047	37	37	36
0.75		**100 LA**	104 510-••B	715	71.4	68.0	0.57	2.8	3.9	10.1	2.4	2.8	0.0069	44	44	44
1.1		**100 LB**	104 520-••B	705	71.7	69.0	0.61	3.8	3.8	15	2.1	2.6	0.0083	47	47	44
1.5		**112 M**	114 310-••B	700	73.4	72.8	0.61	4.9	3.8	20	2.3	2.5	0.01	51	51	46
2.2		**132 S**	134 110-••B	720	79.2	75.4	0.67	5.9	5.3	29.2	1.8	2.5	0.038	82	82	56
3		**132 M**	134 310-••B	720	80.0	79.0	0.68	7.8	5.5	39.8	2.4	2.6	0.045	96	96	56
		M3JP/M3KP	3GJP/3GKP													
4		**160 MLA**	164 410-••G	717	83.0	83.1	0.70	10.1	5.2	53	1.8	2.8	0.071	152	146	59
5.5		**160 MLB**	164 420-••G	713	83.2	83.7	0.70	13.5	5.1	74	1.9	2.6	0.09	166	160	60
7.5		**160 MLC**	164 430-••G	714	85.5	86.1	0.70	18.4	5.7	100	1.8	2.9	0.121	194	188	60
11		**180 MLB**	184 420-••G	726	90.0	90.0	0.75	24	5.7	145	1.6	2.7	0.239	233	227	63
15		**200 MLA**	204 410-••G	735	90.2	90.2	0.78	31	7.2	195	2.5	3.3	0.45	315	295	64
18.5	**HO**	**200 MLB**	204 420-••G	734	90.2	90.3	0.79	37	7.2	241	2.4	3.2	0.54	335	315	64
18.5		**225 SMA**	224 210-••G	734	91.0	91.0	0.75	40	6.6	241	2.0	3.0	0.61	370	350	61
22		**225 SMB**	224 220-••G	733	91.2	91.4	0.78	46	6.2	287	1.9	2.7	0.68	385	365	61
30	**HO**	**225 SMC**	224 230-••G	733	91.1	91.3	0.76	62	6.5	391	2.0	3.0	0.75	410	390	65
30		**250 SMA**	254 210-••G	736	91.8	91.9	0.78	61	6.8	389	2.1	3.0	1.25	455	435	61
37	**HO**	**250 SMB**	254 220-••G	737	92.5	92.3	0.77	75	7.6	479	2.3	3.4	1.52	500	480	65
		M2JA/M2KA	3GJA/3GKA													
37		**280 SMA**	284 210-••A	741	93.5	0.0	0.78	74	7.3	477	1.8	3.0	1.85	570	570	65
45		**280 SMB**	284 220-••A	741	94.0	93.8	0.78	90	7.6	580	1.9	3.2	2.2	610	610	65
55	**HO**	**280 SMC**	284 230-••A	741	94.4	94.3	0.79	108	7.8	709	1.9	3.2	2.85	690	690	62
55		**315 SMA**	314 210-••A	740	94.1	94.0	0.81	104	7.1	710	1.6	2.7	3.2	840	840	62
75		**315 SMB**	314 220-••A	740	94.4	94.3	0.82	140	7.1	968	1.7	2.7	4.1	930	930	62
90		**315 SMC**	314 230-••A	740	94.8	94.7	0.82	167	7.4	1161	1.8	2.7	4.9	1000	1000	64
110		**315 MLA**	314 410-••A	740	95.1	95.1	0.83	202	7.3	1420	1.8	2.7	5.8	1120	1120	72
132		**355 S**	354 100-••A	742	95.0	94.9	0.80	250	5.8	1699	1.5	2.3	10.4	1550	1550	75
160		**355 SMA**	354 210-••A	742	95.2	95.1	0.80	305	6.3	2059	1.7	2.4	12.5	1800	1800	75
200		**355 MLA**	354 410-••A	743	95.5	95.1	0.77	395	6.6	2571	1.8	2.7	14.6	2100	2100	75
250		**355 MLC**	354 430-••A	744	95.7	95.4	0.80	470	6.6	3209	1.5	3.0	15.8	2100	2100	75
200		**400 M**	404 300-••A	743	95.5	95.1	0.77	395	6.6	2571	1.8	2.7	14.6	2150	2150	75
250		**400 MA**	404 410-••A	744	95.7	95.4	0.80	470	6.6	3209	1.5	3.0	15.8	2150	2150	75
315		**400 LKA**	404 510-••A	744	96.0	95.9	0.79	605	6.3	4043	1.4	2.6	16.5	2800	2800	80
355		**400 LKB**	404 530-••A	744	96.2	96.0	0.79	680	6.6	4557	1.5	2.7	19	3050	3050	80

[1)] Motors are certified for the voltages 380-400-415 V 50 Hz according to IEC 34-1. Values above are given for 400 V 50 Hz; data for other voltages on request.
[2)] Temperature rise class F

Design HO = High-output design. The output of these motors is one step higher than the basic with rated outputs in accordance with CENELEC.

Notes:
- **When ordering sizes 160-200 with lifetime lubrication, variant code 195 'Bearings greased for life' has to be added**
- **When ordering IIC motors, following variant code has to be added: 461 = EEx d, EEx de design, Group IIC**

Data for other voltages and frequencies, and for surface temperature T5 on request.

The two bullets in the product code indicate choice of mounting arrangement (see ordering information), voltage and frequency (below).

S	D	A [a)]	B [a)]	E	F [b)]	X
380 VY 50 Hz 400 VY 50 Hz 415 VY 50 Hz 220 VΔ 50 Hz 230 VΔ 50 Hz 440 VY 60 Hz	380 VΔ 50 Hz 400 VΔ 50 Hz 415 VΔ 50 Hz 660 VY 50 Hz 690 VY 50 Hz 440 VΔ 60 Hz	380 VY 50 Hz 220 VΔ 50 Hz	380 VΔ 50 Hz 660 VY 50 Hz	500 VΔ 50 Hz 575 VΔ 60 Hz	500 VY 50 Hz	Other rated voltage, connection or frequency, max. 690 V
		G [a)]	**H [a)]**	**T [b)]**	**U [b)]**	
		415 VY 50 Hz	415 VΔ 50 Hz	660 VΔ 50 Hz	690 VΔ 50 Hz	

[a)] On request for motor sizes 315-400. [b)] On request for motor sizes 355-400.

Technical data – Flameproof motors

M2JA EEx d IIB/IIC T4, two-speed
M2KA EEx de IIB/IIC T4, two-speed

IP 55, IC 411; Insulation class F, temperature rise class B

Output kW	Motor type M2JA/M2KA	Product code 3GJA/3GKA	Speed r/min	Current I_N	Weight kg
1500/1000 r/min = 4/6 poles		**400 V 50 Hz**	**Fan drive, two separate windings**		
0.95/0.28	**90 S**	098 304-••B	1390/950	2.3/1.1	32.5
1.25/0.4	**90 L**	098 514-••B	1410/955	3.0/1.3	37
1.8/0.55	**100 LA**	108 514-••B	1435/965	3.9/1.9	44
2.2/0.7	**100 LB**	108 524-••B	1435/970	4.7/2.4	47.5
2.6/0.8	**112 M**	118 314-••B	1425/970	5.3/2.8	51.5
4.5/1.5	**132 S**	138 114-••B	1460/985	8.8/4.9	79
6.0/2.0	**132 M**	138 314-•´•B	1460/980	11.5/5.4	82
10.5/3.5	**160 M**	168 304-••B	1460/970	22/8.8	140
16/5	**180 M**	188 304-••B	1475/980	32/12.8	205
23/7.2	**200 MLA**	208 414-••B	1470/985	42/15	275
34/11	**225 SMB**	228 224-•´•B	1475/985	60/22	350
45/15	**250 SMA**	258 214-••B	1475/985	83/33	460
60/18.5	**280 SMA**	288 214-••A	1484/991	112/42	590
85/27	**280 SMB**	288 224-••A	1484/990	152/57	630
100/30	**280 SMC**	288 234-••A	1485/990	180/61	690
120/36	**315 SMB**	318 224-••A	1485/989	209/72	945
145/43	**315 SMC**	318 234-••A	1485/989	253/85	990
180/54	**315 MLA**	318 414-••A	1484/990	314/107	1100
160/55	**355 S**	358 104-••A	1483/986	275/105	1550
240/85	**355 SMA**	358 214-••A	1487/988	410/160	1800
315/90	**355 MLA**	358 414-••A	1494/994	540/165	2100
315/90	**400 M**	408 304-••A	1494/994	540/165	2150
370/120	**400 LKA**	408 514-••A	1495/994	655/225	3050
3000/1500 r/min = 2 - 4 poles		**400 V 50 Hz**	**Fan drive, Dahlander-connection**		
0.95/0.2	**80 L**	088 328-••B	2750/1420	2.0/0.6	24
1.4/0.3	**90 S**	098 118-••B	2860/1460	3.0/1.0	32.5
1.9/0.4	**90 L**	098 518-••B	2880/1465	3.9/1.2	37
3/0.6	**100 L**	108 518-••B	2875/1460	7.5/2.4	44
3.7/0.75	**112 M**	118 318-••B	2900/1470	7.1/2.0	51.5
6.2/1.3	**132 S**	138 118-••B	2880/1455	11.3/3.4	79
8.3/1.7	**132 M**	138 128-••B	2875/1455	14.8/4.0	82
10/2	**160 MA**	168 318-••B	2915/1475	19/4.8	130
16/3.2	**160 M**	168 308-••B	2925/1475	29/7.5	140
21.5/4.7	**180 M**	188 308-••B	2920/1470	38/10	205
30/7	**200 MLA**	208 418-••B	2945/1480	54/16	280
45/13	**225 SMB**	228 228-••B	2960/1480	80/25	365
55/15	**250 SMA**	258 218-••B	2965/1485	96/32	460
70/22	**280 SMA**	288 218-••A	2965/1485	130/43	590
90/30	**280 SMB**	288 228-••A	2965/1485	153/54	630
105/33	**280 SMC**	288 238-••A	2970/1485	179/60	690
125/35	**315 SMB**	318 228-••A	2970/1484	218/70	940
175/45	**315 MLA**	318 418-••A	2971/1484	300/90	1190
190/45	**355 S**	358 108-••A	2987/1491	345/95	1550
200/50	**355 SMA**	358 218-••A	2987/1491	360/100	1750
[1]	**355 MLA**	358 418-••A			
[1]	**400 M**	408 308-••A			
[1]	**400 LKA**	408 518-••A			

[1] On request

Notes:
- **When ordering sizes 160-200 with lifetime lubrication, variant code 195 'Bearings greased for life' has to be added**
- **When ordering IIC motors, following variant code has to be added: 461 = EEx d, EEx de design, Group IIC**

Detailed technical data on request.

The two bullets in the product code indicate choice of mounting arrangement (see ordering information), voltage and frequency (below).

Motor	S	D	A	B	E	H	T	U	X
80-250	230V 50Hz	400V 50Hz	220V 50Hz	380V 50Hz	500V 50Hz	415V 50Hz	660V 50Hz	690 V 50 Hz	Other rated voltage
280-400	220-230V 50Hz 440-480V 60Hz	380-400V 50Hz	220V 50Hz	380V 50Hz	500V 50Hz 575V 60Hz	400-415V 50Hz 460-480V 60Hz			connection or freq. max. 690 V

Technical data – Flameproof motors

M2JA EEx d IIB/IIC T4, two-speed
M2KA EEx de IIB/IIC T4, two-speed

IP 55, IC 411; Insulation class F, temperature rise class B

Output kW	Motor type M2JA/M2KA	Product code 3GJA/3GKA	Speed r/min	Current I_N	Weight kg
1500/750 r/min = 4-8 poles		**400 V 50 Hz**	**Fan drive, Dahlander-connection**		
0.6/0.11	**80 L**	088 329-••B	1415/690	1.6/0.6	24
1/0.23	**90 S**	098 119-••B	1400/705	2.4/1.0	32.5
1.5/0.31	**90 L**	098 519-••B	1420/720	3.7/1.5	37
2/0.45	**100 LA**	108 519-••B	1425/720	4.3/1.7	44
2.4/0.5	**100 LB**	108 529-••B	1435/725	5.2/2.0	47.5
2.9/0.6	**112 M**	118 319-••B	1435/725	6.1/2.4	51.5
5.0/1.0	**132 S**	138 119-••B	1450/725	9.5/3.2	79
6.8/1.4	**132 M**	138 129-••B	1460/730	13.2/4.9	82
10.5/2.2	**160 M**	168 309-••B	1460/730	21/7.8	140
17/3.4	**180 M**	188 309-••B	1465/735	33/11	205
29/6.5	**200 MLA**	208 419-••B	1470/730	54/17	280
34/7.5	**225 SMA**	228 219-••B	1475/730	63/22	365
48/11	**250 SMA**	258 219-••B	1480/740	89/33	460
65/15	**280 SMA**	288 219-••A	1485/743	120/46	590
80/18.5	**280 SMB**	288 229-••A	1485/742	144/46	630
90/20	**280 SMC**	288 239-••A	1485/742	159/49	690
110/25	**315 SMB**	318 229-••A	1485/742	195/58	945
160/37	**315 MLA**	318 419-••A	1486/742	283/88	1100
155/38	**355 S**	358 109-••A	1492/746	275/77	1550
175/44	**355 SMA**	358 219-••A	1492/743	305/90	1800
220/55	**355 MLA**	358 419-••A	1493/745	380/125	2100
220/55	**400 M**	408 309-••A	1493/745	380/125	2150
[1]	**400 LK_**	408 519-••A			
1500/1000 r/min = 4/6 poles		**400 V 50 Hz**	**Constant torque, two separate windings**		
0.8/0.4	**90 S**	099 304-••B	1415/960	2.1/1.6	32.5
1.0/0.6	**90 L**	099 514-••B	1425/950	2.5/2.1	37
1.5/0.9	**100 LA**	109 514-••B	1445/965	3.4/3.2	44
1.8/1.0	**100 LB**	109 524-••B	1450/965	4.2/3.3	47.5
2.2/1.2	**112 M**	119 314-••B	1445/965	4.8/3.8	51.5
3.3/2.2	**132 S**	139 114-••B	1420/980	7.1/6.4	79
4.5/3	**132 M**	139 314-••B	1470/980	9.3/8.0	82
7.5/5.5	**160 M**	169 304-••B	1465/965	16/13.8	140
13/8	**180 M**	189 304-••B	1475/980	27/20	205
18/12	**200 MLA**	209 414-••B	1475/980	32/24	275
32/21	**225 SMB**	229 224-••B	1480/985	58/40	350
36/24	**250 SMA**	259 214-••B	1480/990	65/46	460

[1] On request

Notes:
- **When ordering sizes 160-200 with lifetime lubrication, variant code 195 'Bearings greased for life' has to be added**
- **When ordering IIC motors, following variant code has to be added: 461 = EEx d, EEx de design, Group IIC**

Detailed technical data on request.

The two bullets in the product code indicate choice of mounting arrangement (see ordering information), voltage and frequency (below).

Motor	S	D	A	B	E	H	T	U	X
80-250	230V 50Hz	400V 50Hz	220V 50Hz	380V 50Hz	500V 50Hz	415V 50Hz	660V 50Hz	690 V 50 Hz	Other rated voltage
280-400	220-230V 50Hz 440-480V 60Hz	380-400V 50Hz	220V 50Hz	380V 50Hz	500V 50Hz 575V 60Hz	400-415V 50Hz 460-480V 60Hz			connection or freq. max. 690 V

Technical data – Flameproof motors

M2JA EEx d IIB/IIC T4, two-speed
M2KA EEx de IIB/IIC T4, two-speed

IP 55, IC 411; Insulation class F, temperature rise class B

Output kW	Motor type M2JA/M2KA	Product code 3GJA/3GKA	Speed r/min	Current I_N	Weight kg
3000/1500 r/min = 2-4 poles		**400 V 50 Hz**	**Constant torque, Dahlander-connection**		
0.95/0.6	**80 L**	089 328-••B	2750/1420	2.0/1.8	24
1.1/0.85	**90 S**	099 118-••B	2735/1405	2.4/2.1	32.5
1.5/1.25	**90 L**	099 518-••B	2800/1410	3.1/3.0	37
2.2/1.75	**100 LA**	109 518-••B	2815/1430	4.4/3.8	44
2.9/2.25	**100 LB**	109 528-••B	2850/1440	5.8/5.1	47.5
3.6/2.8	**112 M**	119 318-••B	2860/1440	7.0/6.1	51.5
4.7/3.1	**132 SB**	139 118-••B	2820/1420	8.8/7.4	79
7.2/4.8	**132 M**	139 128-••B	2870/1435	12.8/11.0	82
8.5/6	**160 MA**	169 318-••B	2895/1445	16.5/13.5	130
12/8.5	**160 LA**	169 308-••B	2895/1445	22.5/18	146
18/12	**180 M**	189 308-••B	2925/1460	33/26	205
29/21	**200 MLA**	209 418-••B	2940/1480	52/41	280
39/29	**225 SMB**	229 228-••B	2955/1485	67/57	365
50/40	**250 SMA**	259 218-••B	2950/1480	86/75	460
70/50	**280 SMA**	289 218-••A	2965/1488	130/96	590
90/65	**280 SMB**	289 228-••A	2965/1486	153/116	630
105/75	**280 SMC**	289 238-••A	2970/1487	179/134	690
125/85	**315 SMB**	319 228-••A	2971/1485	218/178	940
175/120	**315 MLA**	319 418-••A	2971/1485	300/240	1190
170/125	**355 S**	359 108-••A	2980/1486	285/260	1550
180/150	**355 SMA**	359 218-••A	2983/1487	300/290	1750
220/165	**355 MLA**	359 418-••A	2985/1490	370/340	2150
220/165	**400 M**	409 308-••A	2985/1490	370/340	2200
[1]	**400 LKA**	409 518-••A			
1500/750 r/min = 4-8 poles		**400 V 50 Hz**	**Constant torque, Dahlander-connection**		
0.45/0.23	**80 L**	089 329-••B	1400/690	1.2/1.2	24
0.55/0.3	**90 S**	099 119-••B	1360/700	1.3/1.3	32.5
0.75/0.4	**90 L**	099 519-••B	1355/700	1.7/1.6	37
1.4/0.7	**100 LA**	109 519-••B	1425/710	3.1/2.8	44
1.8/0.9	**100 LB**	109 529-••B	1420/705	3.8/3.4	47.5
2.0/1.0	**112 M**	119 319-••B	1425/710	3.7/2.9	51.5
3.8/1.9	**132 S**	139 119-••B	1450/730	7.4/7.3	79
5/2.5	**132 M**	139 129-••B	1455/730	9.2/9.2	82
8/4.5	**160 M**	169 309-••B	1445/730	17/15.4	140
13/7	**180 L**	189 509-••B	1455/730	26/23	220
20/11	**200 MLA**	209 419-••B	1465/735	37/24.5	270
24/14	**200 MLB**	209 429-••B	1470/735	43/30.5	285
34/20	**225 SMB**	229 229-••B	1475/740	61/43	350
41/25	**250 SMA**	259 219-••B	1475/740	73.5/54	455
50/32	**280 SMA**	289 219-••A	1484/742	193/73	590
65/40	**280 SMB**	289 229-••A	1486/743	115/92	630
85/50	**280 SMC**	289 239-••A	1487/743	149/115	690
95/65	**315 SMB**	319 229-••A	1486/742	163/130	945
150/95	**315 MLA**	319 419-••A	1486/742	255/193	1100
150/90	**355 S**	359 109-••A	1491/741	260/195	1550
180/130	**355 SMA**	359 219-••A	1487/741	310/280	1800
210/160	**355 MLA**	359 419-••A	1489/742	360/355	2100
210/160	**400 M**	409 309-••A	1489/742	360/355	2150
250/185	**400 LKA**	409 519-••A	1493/745	435/485	3050

[1] On request

Notes:
- **When ordering sizes 160-200 with lifetime lubrication, variant code 195 'Bearings greased for life' has to be added**
- **When ordering IIC motors, following variant code has to be added: 461 = EEx d, EEx de design, Group IIC**

Detailed technical data on request.

The two bullets in the product code indicate choice of mounting arrangement (see ordering information), voltage and frequency (below).

Motor	S	D	A	B	E	H	T	U	X
80-250	230V 50Hz	400V 50Hz	220V 50Hz	380V 50Hz	500V 50Hz	415V 50Hz	660V 50Hz	690 V 50 Hz	Other rated voltage
280-400	220-230V 50Hz 440-480V 60Hz	380-400V 50Hz	220V 50Hz	380V 50Hz	500V 50Hz 575V 60Hz	400-415V 50Hz 460-480V 60Hz			connection or freq. max. 690 V

Rating plates

For motor sizes 80 to 132 the rating plate gives one current value for the voltage area. That is the highest current that can occur within the voltage area with the given output.

For motor sizes 160 to 400 the rating plate is in table form giving values for speed, current and power factor for six voltage levels.

European standards require special marking on safety motors. The marking shall include the following:
- type of protection
- apparatus group
- temperature class
- name of certifying body
- certificate number

Motor sizes 80 to 132

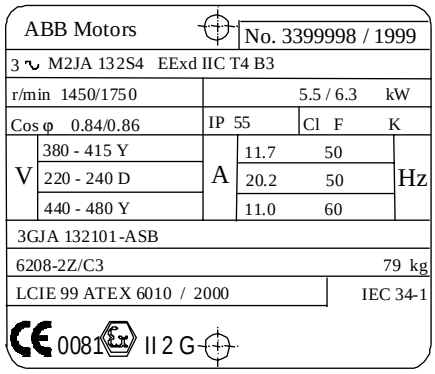

Motor sizes 160 to 400

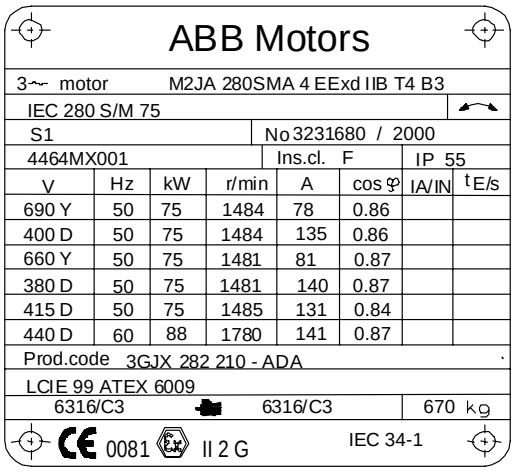

Variant codes - Flameproof motors

Code	Variant codes / Flameproof motors [1]	Motor size 80-132	160-250	280-315	355-400
	Balancing				
052	Balancing to grade R (ISO 2373).	T	T	T	T
417	Balancing to grade S (ISO 2373).	T	T	T	T
424	Full key balancing.	T	T	T	T
	Bearings and lubrication				
036	Transport locking for bearings.	L	L	L	L
037	Roller bearing at D-end.	–	–	R	R
039	Cold resistant grease. For bearing temperatures -55...+100°C.	T	L	L	L
041	Bearings regreasable via grease nipples.	–	S	S	S
194	2Z-bearings at both ends. Sizes 160-250 available as stocked option with lifetime bearings.	S	L	R	–
195	Bearings greased for life. Sizes 160-250 available as stocked option with lifetime bearings.	S	L	R	–
043	SPM-nipples.	–	S	L	S
058	Angular contact bearing at D-end.	–	R	R	R
107	Bearing mounted PT100 resistance elements. (only M2KA/EEx de)	–	T	T	T
433	Grease relief. (Not possible for flange-mounted sizes 160-180)	R	R	–	–
	Brakes				
412	Built-on brake.	–	R	R	R
	Branch standard designs				
178	Stainless steel/acid proof bolts.	S	L	T	T
209	Non-standard voltage or frequency converter supply.	R	T	T	T
411	Increased efficiency design.	R	R	T	T
432	Copper bar rotor.	–	–	T	T
785	Reinforced tropicalisation.	T	T	S	S
	Cooling system				
068	Metal fan.	R	L	L	L/S
075	Cooling method IC 418 (without fan).	R	T	T	T
183	Separate motor cooling (fan axial, N-end).	–	T	T	T
422	Separate motor cooling (fan top or side, N-end).	–	–	T	T
791	Stainless steel fan cover.	–	R	R	R
	Coupling				
035	Assembly of customer supplied coupling-half.	L	L	L	L
	Drain holes				
076	Draining holes with plugs.	–	T	T	T
	Earthing bolt				
067	External earthing bolt.	S	S	S	S
	Hazardous environments				
461	EEx d(e) design, Group IIC.	T	T	T	T
462	EEx d(e) design, temperature class T5.	T	R	R	R
463	EEx d(e) design, temperature class T6.	R	R	R	R
464	Alleinschutz -design. Certification of flameproof motor and protection device together.	R	R	R	R

[1] = Certain variant codes cannot be used together
R = On request
S = Included as standard
L = Modification of stocked motor or during new production
T = With new production only

Code	Variant codes / Flameproof motors [1]	Motor size 80-132	160-250	280-315	355-400
	Heating elements				
450	Heating element, 110-120 V.	T	T	T	T
451	Heating element, 220-240 V.	T	T	T	T
	Insulation system				
014	Winding insulation class H.	–	–	T	T
405	Special winding insulation for frequency converter supply.	T	T	T	T
406	Winding for supply > 690 ≤1000 Volts.	–	–	T	T
	Mounting arrangements				
008	IM 2101 foot/flange mounted, IEC flange, from IM 1001 (B34 from B3).	–	–	–	–
009	IM 2001 foot/flange mounted, IEC flange, from IM 1001 (B35 from B3).	L	L	L	L
228	Flange FF130.	R	–	–	–
229	Flange ring FT130.	R	–	–	–
235	Flange FF165.	R	–	–	–
236	Flange FT165.	R	–	–	–
245	Flange FF215.	R	–	–	–
246	Flange FT215.	R	–	–	–
255	Flange FF265.	R	–	–	–
256	Flange FT265.	R	–	–	–
257	Flange FF100.	R	–	–	–
258	Flange FT100.	R	–	–	–
259	Flange FF115.	R	–	–	–
260	Flange FT115.	R	–	–	–
	Noise reduction				
055	Noise reducing cover.	–	–	T	T
	Painting				
114	Special paint colour, standard grade.	L	L	L	L
115	Offshore, zinc primer painting.	–	R	R	R
179	Special paint specification.	R	R	R	R
	Protection				
005	Protective roof, vertical motor, shaft down.	S	S	S	S
072	Radial seal at D-end. Sizes 80-132 only with flange-mounted motors.	L	L	L	L
073	Sealed against oil at D-end.	T	T	T	T
158	Degree of protection IP 65.	R	R	R	R
211	Weather protected, IP xxW.	T	T	T	T
401	Protective roof, horizontal motor.	T	T	T	T
403	Degree of protection IP 56.	T	T	T	T
404	Degree of protection IP 56, without fan.	–	T	T	T
783	Labyrinth sealing at D-end.	–	R	R	R
	Rating & instruction plates				
002	Restamping voltage, frequency and output, continuous duty.	L	L	L	L
013	Restamping to output for class F temperature rise.	L	L	L	L
095	Restamping output (maintained voltage, frequency), intermittent duty.	L	L	L	L
138	Mounting of additional identification plate.	L	L	L	L
150	Instruction plates and maintenance in non-standard language.	R	R	R	R
161	Additional rating plate delivered loose.	L	L	L	L

[1] = Certain variant codes cannot be used together
R = On request
S = Included as standard
L = Modification of stocked motor or during new production
T = With new production only

Code	Variant codes / Flameproof motors [1]	Motor size 80-132	160-250	280-315	355-400
	Shaft & rotor				
069	Two shaft extensions as per basic catalogue.	T	T	T	T
070	One or two special shaft extensions, standard shaft material.	T	T	T	T
155	Cylindrical shaft extension, D-end, without key-way.	T	T	T	T
156	Cylindrical shaft extension, N-end, without key-way.	T	T	T	T
410	Stainless/acid-proof steel shaft (standard or non-standard design).	R	R	T	T
431	Special shaft material for low temperatures, -40°C.	T	T	T	T
	Standards and regulations				
152	Classified shaft material.	T	T	T	T
153	Reduced test for classification society.	L	L	L	L
421	VIK design (Verband der industriellen Energie- und Kraftwirtshaft e.V).	T	T	T	T
773	EEMUA No 132 1988 design.	R	R	T	T
774	NORSOK (North SeaTerritorial Waters) design.	R	R	T	T
775	SHELL DEP 33.66.05.31-Gen. January 1999 design.	L	L	T	T
	Marine motors				
	See catalogue "Marine motors, BA/Marine GB" for details.				
	Stator winding temperature sensors				
121	Bimetal detectors, break type (NCC), (3 in series), 130°C in stator winding.	T	T	T	T
122	Bimetal detectors, break type (NCC), (3 in series), 150°C in stator winding.	T	T	T	T
123	Bimetal detectors, break type (NCC), (3 in series), 170°C in stator winding.	T	T	T	T
125	Bimetal detectors, break type (NCC), (2X3 in series), 150°C in stator winding.	T	T	T	T
127	Bimetal detectors, break type (NCC), (3 in series 130°C & 3 in series 150°) in stator winding.	T	T	T	T
435	PTC - thermistors (3 in series), 130°C, in stator winding.	T	T	T	T
436	PTC - thermistors (3 in series), 150°C, in stator winding.	L	S	S	S
437	PTC - thermistors (3 in series), 170°C, in stator winding.	L	L	T	T
439	PTC - thermistors (2x3 in series), 150°C, in stator winding.	L	T	T	T
441	PTC - thermistors (3 in series 130°C & 3 in series 150°C), in stator winding.	T	T	T	T
442	PTC - thermistors (3 in series 150°C & 3 in series 170°C), in stator winding.	T	T	T	T
445	PT100 resistance element (1 per phase) in stator winding.	T	T	T	T
446	PT100 resistance element (2 per phase) in stator winding.	R	T	T	T
	Terminal box				
015	Δ-connection in terminal box (reconnection from Y).	L	L	L	L
017	Y-connection in terminal box (reconnection from Δ).	L	L	L	L
157	Terminal box degree of protection IP 65.	T	T	T	T
230	Standard cable glands. Valid only for EEx de motors.	L	S	S	S
231	Standard cable glands with clamping device. Valid only for EEx de motors.	T	T	T	T
400	4 x 90 degr turnable terminal box. EEx de 160-180 = T	T	S	T	T
413	Extended cable connection, no terminal box.	T	T	T	T
418	Separate terminal box for temperature detectors.	–	T	T	T
466	Terminal box at N-end. Not possible for sizes 160-180.	–	T	R	R
468	Non-standard cable entry direction (please state cable direction).	T	T	T	T
469	Axial cable entry direction. EEx d = S, EEx de = R	S/R	S/R	R	R
730	Prepared for NPT cable glands.	L	L	L	L
731	Non-standard cable glands.	R	R	R	R
732	Standard cable gland EEx d IIB, armoured cable.	T	T	T	T
733	Standard cable gland EEx d IIB, non-armoured cable.	T	T	T	T

[1] = Certain variant codes cannot be used together
R = On request
S = Included as standard
L = Modification of stocked motor or during new production
T = With new production only

Code	Variant codes / Flameproof motors [1]	Motor size 80-132	160-250	280-315	355-400
734	Standard cable gland EEx d IIC, armoured cable.	T	T	T	T
735	Standard cable gland EEx d IIC, non-armoured cable.	T	T	T	T
736	Standard cable gland EEx e, fulfilling EN 50014 and EN 50019.	T	T	T	T
737	Standard cable gland EEx e, with clamping device, fulfilling EN 50014 and EN 50019.	T	T	T	T
	Testing				
145	Type test report from test of identical motor.	L	L	L	L
146	Type test with report for motor from specific delivery batch.	L	L	L	L
147	Type test with report for motor from specific delivery batch, customer witnessed.	L	L	L	L
148	Routine test report.	L	L	L	L
149	Testing according to separate test specification.	L	L	L	L
221	Type test and multi-point load test with report for motor from specific delivery batch. Complete type test with partial load test.	R	R	T	T
222	Torque/speed curve, type test and multi-point load test with report for motor from specific delivery batch. Complete type test without partial load test.	R	R	T	T
760	Vibration level test.	L	L	L	L
761	Vibration spectrum test.	–	L	L	L
762	Noise level test.	L	L	L	L
763	Noise spectrum test.	L	L	L	L
764	Complete test with ABB frequency converter.	R	R	L	L
768	Chog type test with report for motor from specific delivery batch.	R	T	R	R
769	Chog type test report from test of identical motor.	R	T	R	R
	Variable speed drives				
701	Insulated bearing at N-end. Note: In Variable speed drives all Ex-motors size 280 and above must be equipped with insulated bearings.	–	–	T	T
704	EMC cable gland.	–	–	R	R
182	Pulse sensor mounted as specified (Leine & Linde equivalent), hollow-shaft type. Assembly of customer supplied tacho.	–	R	T	T
479	Mounting of other type of pulse tacho than shaft extension.	–	R	T	T
471	512 pulse tacho (Leine & Linde equivalent).	–	T	T	T
472	1024 pulse tacho (Leine & Linde equivalent).	–	T	T	T
473	2048 pulse tacho (Leine & Linde equivalent).	–	T	T	T
747	EEx d pulse tacho.	–	T	T	T
474	Separate motor cooling (fan axial, N-end) and prepared for hollow shaft pulse tacho (Leine & Linde equivalent).	–	R	T	T
478	Separate motor cooling (fan top, N-end) and prepared for hollow shaft pulse tacho (Leine & Linde equivalent).	–	–	T	T
429	Separate motor cooling (fan top, N-end) and Leine & Linde type EEx e 840 pulse tacho mounted.	–	–	T	T
476	Separate motor cooling (fan axial, N-end) and 1024 pulse tacho (Leine & Linde EEx e 840) mounted.	–	R	T	T
477	Separate motor cooling (fan axial, N-end) and 2048 pulse tacho (Leine & Linde EEx e 840) mounted.	–	R	T	T
	Y/Δ-starting				
117	Terminals for Y/Δ start at both speeds (two-speed windings).	–	–	T	T
118	Terminals for Y/Δ start at high speed (two-speed windings).	–	–	T	T
119	Terminals for Y/Δ start at low speed (two-speed windings).	–	–	T	T

[1] = Certain variant codes cannot be used together
R = On request
S = Included as standard
L = Modification of stocked motor or during new production
T = With new production only

Dimension drawings

M3000 Flameproof motors

Foot-mounted motor IM 1001, IM B3

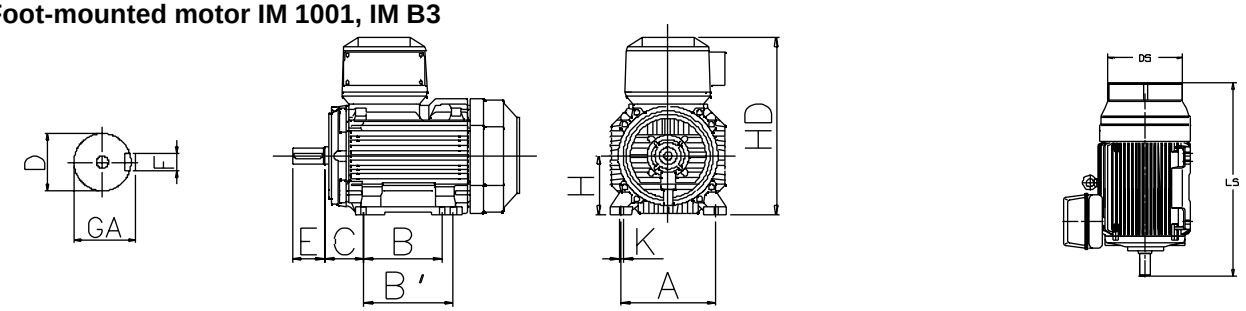

Flange-mounted motor IM 3001, IM B5

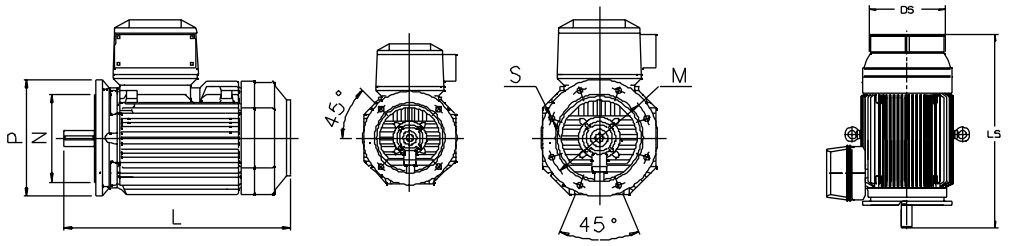

Sizes 80-200 Sizes 225-400

IMV5 with protection cover

IM 1001, IM B3 AND IM 3001, IM B5											IM 1001, IM B3								IM 3001, IM B5				Protective roof		
Motor size	D poles 2	D poles 4-8	GA poles 2	GA poles 4-8	F poles 2	F poles 4-8	E poles 2	E poles 4-8	L max poles 2	L max poles 4-8	A	B	B'	C	HD M2JA M3JP	HD M2KA M3KP	K	H	M	N	P	S	DS	LS poles 2	LS poles 4-8
80	19	19	21.5	21.5	6	6	40	40	287	287	125	100	–	50	251.5	250	10	80	165	130	200	12	150	306	306
90 S	24	24	27	27	8	8	50	50	336	336	140	100	125	56	276.5	275	10	90	165	130	200	12	170	360	360
90 L	24	24	27	27	8	8	50	50	336	336	140	100	125	56	276.5	275	10	90	165	130	200	12	170	360	360
100	28	28	31	31	8	8	60	60	399	399	160	140	–	63	295	294	10	100	215	180	250	15	188	444	444
112	28	28	31	31	8	8	60	60	419	419	190	140	–	70	307.5	306	12	112	215	180	250	15	188	444	444
132 S	38	38	41	41	10	10	80	80	512	512	216	140	178	89	352.5	351	12	132	265	230	300	15	255	548	548
132 M	38	38	41	41	10	10	80	80	512	512	216	140	178	89	352.5	351	12	132	265	230	300	15	255	548	548
160	42	42	45	45	12	12	110	110	711	711	254	210	254	108	447	388	14.5	160	300	250	350	18.5	328	756	756
180	48	48	51.5	51.5	14	14	110	110	706	706	279	241	279	121	485	426	14.5	180	300	250	350	18.5	359	756	756
200	55	55	59	59	16	16	110	110	774	774	318	267	305	133	616	573	18.5	200	350	300	400	18.5	414	844	844
225	55	60	59	64	16	18	110	140	841	871	356	286	311	149	663	620	18.5	225	400	350	450	18.5	462	921	951
250	60	65	64	69	18	18	140	140	875	875	406	311	349	168	726	683	24	250	500	450	550	18.5	506	965	965
280 SM_	65	75	69	79.5	18	20	140	140	1088	1088	457	368	419	190	822	775	24	280	500	450	550	18	460	1190	1190
315 SM_	65	80	69	85	18	22	140	170	1173	1203	508	406	457	216	895	850	30	315	600	550	660	23	520	1290	1320
315 ML_	65	90	69	95	18	25	140	170	1224	1254	508	457	508	216	895	850	30	315	600	550	660	23	520	1345	1375
355 S_	70	100	74.5	106	20	28	140	210	1344	1414	610	500	–	254	1150	985	35	355	740	680	800	23	590	1480	1550
355 SM_	70	100	74.5	106	20	28	140	210	1396	1466	610	500	560	254	1150	985	35	355	740	680	800	23	590	1530	1600
355 ML_	70	100	74.5	106	20	28	140	210	1501	1571	610	560	630	254	1150	985	35	355	740	680	800	23	590	1635	1705
400 M_	70	100	74.5	106	20	28	140	210	1501	1571	686	630	–	280	1195	1035	35	400	–	–	–	–	590	1635	1705
400 LK_	80	100	85	106	22	28	170	210	1708	1748	686	710	800	280	1240	1070	35	400	740	680	800	23	700	1860	1900

IM 3601, IM B14 - Available flange alternatives ; see also variant codes.

Flange size	Variant code	Flange dimensions P	M	N	S	Motor size M2JA/M2KA 80	90	100	112	132
FT100	258	120	100	80	M8	S	NA	NA	NA	NA
FT115	260	140	115	95	M8	R	S	NA	NA	NA
FT130	229	160	130	110	M8	R	R	S	S	NA
FT165	236	200	165	130	M10	NA	NA	NA	NA	S
FT215	246	250	215	180	M12	NA	NA	R	R	R
FT265	256	300	265	230	M12	NA	NA	NA	NA	R

S = Standard flange
R = Special flange
NA = Not possible

Tolerances:

A, B	± 0,8
D, DA	ISO k6 < Ø 50mm
	ISO m6 > Ø 50mm
F, FA	ISO h9
H	+0 -0.5
N	ISO j6
C, CA	± 0.8

Above table gives the main dimensions in mm.

For detailed drawings please our web-pages 'www.abb.com/motors&drives' or contact ABB Motors.

Dimension drawings

Flameproof motors

Terminal boxes, standard with 6 terminals

Motor sizes 80-132

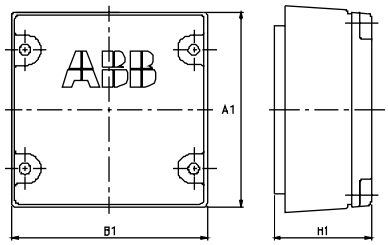

Motor sizes 160 - 250

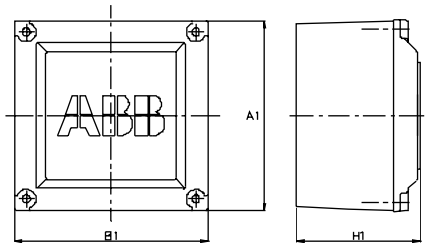

M2JA 280 - 315

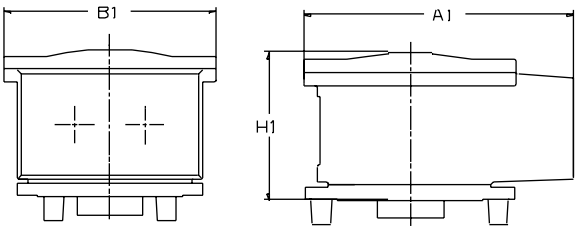

M2JA 355 - 400

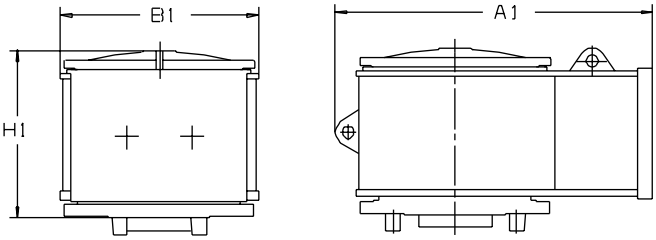

M2KA 280 - 315

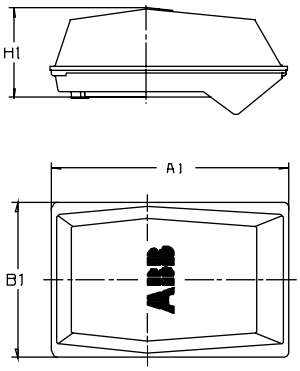

M2KA 355 - 400

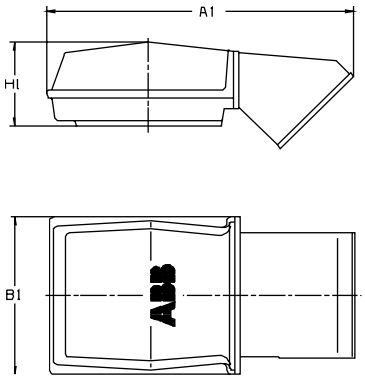

Motor size	A1	B1	H1
EEx d:			
80 - 132	164	162.5	68
160 - 180	234	234	111
200 - 250	339	290	226
EEx de:			
80 - 132	175.5	174	70.5
160 - 180	234	234	51.5
200 - 250	352	319	183.5

For motor dimensions please see dimension drawings on earlier pages.

Terminal box type	**Motor size**	A1	B1	H1
EEx d:				
M2JA 142/2	**280 - 315**	465	370	260
M2JA 162/2	**355 - 400**	790	490	420
EEx de:				
M2KA 142/2	**280 - 315**	536	350	197
M2KA 162/2	**355 - 400**	787	410	226
Adapter MPMM-ZL1				

Flameproof motors EEx d, EEx de in brief, basic design

Motor size		80	90	100	112	132	160	180
Stator	Material Paint colour shade	Cast iron EN-GJL-200 Blue, Munsell 8B 4.5/3.25 (≈ NCS 4822-B05G)						
	Paint thickness	Alkyd paint, thickness ≥ 70 µm					Two-pack epoxy paint, thickness ≥ 80 µm	
Bearing end shields	Material Paint colour shade	Cast iron EN-GJL-200 Blue, Munsell 8B 4.5/3.25 (≈ NCS 4822-B05G)						
	Paint thickness	Alkyd paint, thickness ≥ 70 µm					Two-pack epoxy paint, thickness ≥ 80 µm	
Bearings	D-end	6204-2Z/C3	6205-2Z/C3	6206-2Z/C3	6206-2Z/C3	6208-2Z/C3	6309/C3	6310/C3
	N-end	6204-2Z/C3	6205-2Z/C3	6206-2Z/C3	6206-2Z/C3	6208-2Z/C3	6309/C3	6309/C3
Axially-locked bearings	Inner bearing cover	As standard, locked at D-end						
Bearing seal		V-ring as standard, radial seal on request					Gamma-ring as standard, radial seal on request	
Lubrication		Permanent grease lubrication					Regreasable bearings as std, bearings greased for life as stock option	
SPM-nipples		–					As standard	
Rating plate	Material	Stainless steel						
Terminal box	Frame material Cover material Cover screws material	Cast iron EN-GJL-200 Cast iron EN-GJL-200 Acidproof steel (INOX)					Cast Iron EN-GJL-200 Cast Iron EN-GJL-200 Steel 5G, coated with zinc and yellow cromated	
Connections	Cable entries Terminals	1 x M25 6 terminals for connection with cable lugs (not included)	1 x M25	1 x M32	1 x M32	1 x M32	2 x M40	2 x M40
Fan	Material	Reinforced glass fiber laminate					Reinforced glass fiber laminate or aluminium	
Fan cover	Material Paint colour shade	Steel Blue, Munsell 8b 4.5/3.25 (≈ NCS 4822-B05G)					Zinc coated steel	
	Paint thickness	Two-pack epoxy polyester paint, thickness ≥ 80 µm					Two-pack polyester paint, thickness ≥ 80 µm	
Stator winding	Material Insulation	Copper Insulation class F						
	Winding protection	On request					3 pcs thermistors as standard	
Rotor winding	Material	Pressure die-cast aluminium						
Balancing method		Half key balancing						
Key ways		Closed						
Drain holes		–					Optional	
Enclosure		IP 55, higher protection on request						
Cooling method		IC 411						
Mounting arrangements	Foot-mounted	IM B3 (IM1001), IM B6 (IM1051), IM B7 (IM1061), IM B8 (IM1071), IM V5 (IM1011), IM V6 (IM1031)						
	Flange-mounted Foot- and flange-m.	IM B5 (IM3001), IM V1 (IM3011), IM V3 (IM3031) IM B14 (IM3601), V18 (IM3611), V19 (IM3631) IM B34 (IM2101), IM B35 (IM2001), IM V15 (IM2011), IM V36 (IM2031)						

Flameproof motors EEx d, EEx de in brief, basic design

Motor size		200	225	250	280	315	355	400
Stator	Material Paint colour shade	Cast iron EN-GJL-200 Blue, Munsell 8B 4.5/3.25 (≈ NCS 4822-B05G)						
	Paint thickness	Two-pack epoxy paint, thickness ≥ 80 µm			Two-pack epoxy paint, thickness ≥ 70 µm			
Bearing end shields	Material Paint colour shade	Cast iron EN-GJL-200 Blue, Munsell 8B 4.5/3.25 (≈ NCS 4822-B05G)			Spheroidal graphit EN-GJS-400			
	Paint thickness	Two-pack epoxy paint, thickness ≥ 80 µm			Two-pack epoxy paint, thickness ≥ 70 µm			
Bearings	D-end 2-pole 4-12 -pole	6312/C3	6313/C3	6315/C3	6316/C4 6316/C3	6316/C4 6319/C3	6319M/C4 6322/C3	6319M/C4 6322/C3
	N-end 2-pole 4-12 -pole	6310/C3	6312/C3	6313/C3	6316/C4 6316/C3	6316/C4 6316/C3	6319M/C4 6319/C3	6319M/C4 6319/C3
Axially-locked bearings	Inner bearing cover	As standard, locked at D-end						
Bearing seals		Gamma-ring as standard, radial seal on request			V-ring as standard, radial seal on request			
Lubrication		Regreasable bearings as standard, bearings greased for life as stock option			Regreasable bearings. regreasing nipples, M10x1			
SPM-nipples		As standard			Optional		As standard	
Rating plate	Material	Stainless steel						
Terminal box	Frame material Cover material Cover screws material	Cast iron EN-GJL-200 Cast iron EN-GJL-200 Steel 5G, coated with zinc and yellow cromated			Cast iron EN-GJL-150 Cast iron EN-GJL-150			
Connections	Cable entries Terminals	2 x M50 6 terminals for connection with cable lugs (not included)	2 x M50	2 x M50	2 x M63	2 x M63	2 x M80	2 x M80
Fan	Material	Reinforced glass fiber laminate or aluminium			Reinforced glass fiber laminate, aluminium or polypropylene with metal hub			
Fan cover	Material Paint colour shade	Zinc coated steel Blue, Munsell 8B 4.5/3.25 (≈ NCS 4822-B05G)			Steel			
	Paint thickness	Two-pack polyester paint, thickness ≥ 80 µm			Two-pack epoxy polyester paint, thickness ≥ 80 µm			
Stator winding	Material Insulation	Copper Insulation class F						
	Winding protection	3 pcs thermistors as standard						
Rotor winding	Material	Pressure die-cast aluminium			Pressure die-cast aluminium or copper			
Balancing method		Half key balancing						
Key ways		Closed			Open			
Drain holes		Optional						
Enclosure		IP 55, higher protection on request						
Cooling method		IC 411						
Mounting arrangements	Foot-mounted	IM B3 (IM1001), IM B6 (IM1051), IM B7 (IM1061), IM B8 (IM1071), IM V5 (IM1011), IM V6 (IM1031)						
	Flange-mounted Foot- and flange-m.	IM B5 (IM3001), IM V1 (IM3011), IM V3 (IM3031) Note: Motor size 400 LK_ IM B5 and V3 on request. IM B35 (IM2001), IM V15 (IM2011), IM V36 (IM2031)						

Increased safety EEx e

Range

	Standards	Frame	Size	Output range
Increased safety EEx e	EN 50014, EN 50019	aluminium cast iron	63 - 250 80 - 400	0.18 - 42 kW 0.75 - 350 kW

Terminal boxes

Terminal boxes are mounted on the top of all basic motor versions. The terminal box can also be placed on either side of the motor besides on cast iron 160 to 250 motors. The terminal box is either rotatable or at least allows cable entry from either side which gives a choice of connection possibilities.

Protection class of the standard terminal box is IP 55.

Aluminium motors

In sizes 63 to 180 the terminal box is made of aluminium, the bottom section is integrated with the stator and provided with two openings on both sides. Cable glands are not supplied.

In sizes 200 to 250 the terminal box and cover are made of deep drawn steel, bolted to the stator. The terminal box is provided with two flange openings, one on each side. Cable glands are not supplied.

Cast iron motors

The terminal boxes in motors 71-132 and 200-250 are 4x90° turnable as standard, in motor sizes 160 to 180 and 280-400 as standard 2x180° and as easy option 4x90°.

In sizes 80 to 132 the motors are provided with cast iron terminal boxes with tapped cable entry holes on one side. Cable glands are not supplied in motor sizes 80-132. In motor sizes 160 to 400 the cast iron terminal box is equipped with cable glands or cable boxes as standard.

Co-ordination of terminal boxes and cable entries

If no ordering information on the cable is given, it is assumed to be p.v.c. -insulated. Termination parts are supplied according to the tables below.

For aluminium motors 63-180 and cast iron motors 160-400 metric threads are available as standard.

Motor sizes 63-250 with aluminium frame **Voltage 220 - 690 V, 50 Hz**

Motor size	Opening	Metric cable entry	Comparison Pg gland	Cable diameter mm, min-max.	Max.connection cable area mm²	Terminal bolt size 6 x
63	[1]	**4 x M16**	4 x Pg 11	2x Ø5.5-10	2.5	
71-100	[1]	**4 x M20**	4 x Pg 16	2x Ø8-13	2.5	
112-132	[1]	**M25 + M20**	2 x (Pg 21 + Pg 16)	2x Ø11-17	10	M5
160-180	[1]	**2 x M40 + M12**	4 x Pg 29 + 2 x Pg 9	2x Ø19-27	35	M6
200-250	2 x FL 13	**2 x M63 + M12**	2 x Pg 29	2x Ø19-27	70	M10

[1] Knockout openings

Motor sizes 80-250 with cast iron frame

Motor size	Metric cable entry	Comparison Pg gland	Cable gland diameter mm, min-max.	Max. connection cable area mm²	Terminal bolt size 6 x
80-90	**2 x M25**	2 x Pg 16	2x Ø8-13	6	M4
100-112	**2 x M32**	2 x Pg 21	2x Ø15-20	16	M5
132	**2 x M32**	2 x Pg 21	2x Ø15-20	16	M5
160	**2 x M40 + 2 x M20**	2 x Pg 29 + 2 x Pg 13.5	2x Ø18-27	25	M6
180	**2 x M40 + 2 x M20**	2 x Pg 29 + 2 x Pg 13.5	2x Ø18-27	25	M6
200	**2 x M50 + 2 x M20**	2 x Pg 36 + 2 x Pg 13.5	2x Ø26-35	35	M10
225	**2 x M50 + 2 x M20**	2 x Pg 36 + 2 x Pg 13.5	2x Ø26-35	50	M10
250	**2 x M50 + 2 x M20**	2 x Pg 42 + 2 x Pg 13.5	2x Ø32-49	70	M10

Co-ordination of terminal boxes and cable entries

Cast iron motors sizes 280-400 motors with top-mounted terminal box

Motor size	Flange or adapter	Cable box or cable gland	**Gland thread**	Cable diameter	Max. connection cable area mm^2	Terminal bolt size	Voltage/ frequency code
3000 r/min (2 poles)							
280	3GZF 294 730-749	2x 3GZF 294 730-613	**2x M63x1.5**	2x Ø32-49	2x150	M12	
315	3GZF 294 730-753	2x 3GZF 294 730-613	**2x M63x1.5**	2x Ø32-49	2x240	M12	
355 S	MPMM-ZL1	3GZF 294 730-301		2x Ø48-60	4x240	M12	D
	-	3GZF 294 730-301		2x Ø48-60	2x240	M12	E
355 SM_	MPMM-ZL1	3GZF 294 730-301		2x Ø48-60	4x240	M12	
355 ML_	MPMM-ZL1	LNPB 3328		2x Ø60-80	4x240	M12	
400 M_	MPMM-ZL1	LNPB 3328		2x Ø60-80	4x240	M12	
400 LK_	MPMM-ZL1	LNPB 3328		2x Ø60-80	4x240	M12	
1500 r/min (4 poles)							
280	3GZF 294 730-749	2x 3GZF 294 730-613	**2x M63x1.5**	2x Ø32-49	2x150	M12	
315	3GZF 294 730-753	2x 3GZF 294 730-613	**2x M63x1.5**	2x Ø32-49	2x240	M12	
355 S	MPMM-ZL1	3GZF 294 730-301		2x Ø48-60	4x240	M12	D
	-	3GZF 294 730-301		2x Ø48-60	2x240	M12	E
355 SM_	MPMM-ZL1	3GZF 294 730-301		2x Ø48-60	4x240	M12	
355 ML_	MPMM-ZL1	LNPB 3328		2x Ø60-80	4x240	M12	
400 M_	MPMM-ZL1	LNPB 3328		2x Ø60-80	4x240	M12	
400 LKA	MPMM-ZL1	LNPB 3328		2x Ø60-80	4x240	M12	D
	MPMM-ZL1	LNPB 3328		2x Ø60-80	4x240	M12	E
400 LKB, LKC	MPMM-ZL1	LNPB 3328		2x Ø60-80	4x240	M12	
1000 r/min (6 poles)							
280	3GZF 294 730-749	2x 3GZF 294 730-613	**2x M63x1.5**	2x Ø32-49	2x150	M12	
315	3GZF 294 730-753	2x 3GZF 294 730-613	**2x M63x1.5**	2x Ø32-49	2x240	M12	
355 S, SMA	-	3GZF 294 730-301		2x Ø48-60	2x240	M12	
355 SMB	MPMM-ZL1	3GZF 294 730-301		2x Ø48-60	4x240	M12	D
	-	3GZF 294 730-301		2x Ø48-60	2x240	M12	E
355 ML_	MPMM-ZL1	3GZF 294 730-301		2x Ø48-60	4x240	M12	
400 M	MPMM-ZL1	LNPB 3328		2x Ø60-80	4x240	M12	D
	-	3GZF 294 730-301		2x Ø48-60	2x240	M12	E
400 MA, MB	MPMM-ZL1	LNPB 3328		2x Ø60-80	4x240	M12	
400 LKA	MPMM-ZL1	LNPB 3328		2x Ø60-80	4x240	M12	
400 LKB, LKC	MPMM-ZL1	LNPB 3328		2x Ø60-80	4x240	M12	D
	MPMM-ZL1	LNPB 3328		2x Ø60-80	4x240	M12	E
750 r/min (8 poles)							
280	3GZF 294 730-749	2x 3GZF 294 730-613	**2x M63x1.5**	2x Ø32-49	2x150	M12	
315	3GZF 294 730-753	2x 3GZF 294 730-613	**2x M63x1.5**	2x Ø32-49	2x240	M12	
355 S, SMA	-	3GZF 294 730-301		2x Ø48-60	2x240	M12	
355 MLA	-	3GZF 294 730-301		2x Ø48-60	2x240	M12	
355 MLC	MPMM-ZL1	3GZF 294 730-301		2x Ø48-60	4x240	M12	D
	-	3GZF 294 730-301		2x Ø48-60	2x240	M12	E
400 M	-	3GZF 294 730-301		2x Ø48-60	2x240	M12	D
400 MA	MPMM-ZL1	3GZF 294 730-301		2x Ø48-60	4x240	M12	D
	-	3GZF 294 730-301		2x Ø48-60	2x240	M12	E
400 LK_	MPMM-ZL1	LNPB 3328		2x Ø60-80	4x240	M12	

Voltage/frequency codes:
D - 380-420 VΔ 50 Hz, 660-690 VY 50 Hz, 440-480 VΔ 60 Hz
E - 500 VΔ 50 Hz, 575 VΔ 60 Hz

Examples:

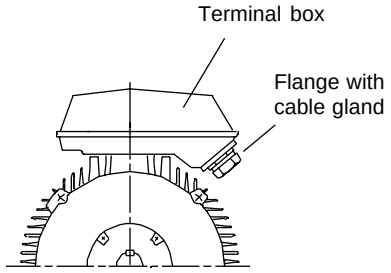

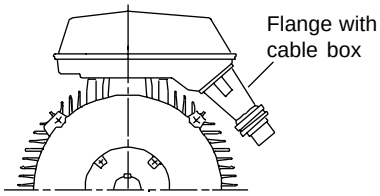

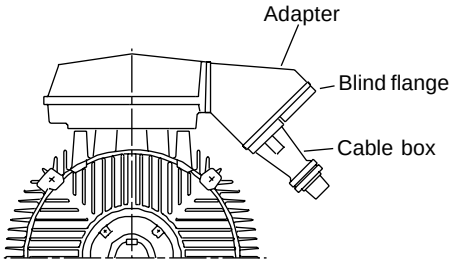

Co-ordination of terminal boxes and cable entries

Cast iron motors sizes 280-400 motors with side-mounted terminal box

Motor size	Flange or adapter	Cable box or cable gland	**Gland thread**	Cable diameter	Max. connection cable area mm²	Terminal bolt size	Voltage/ frequency code
3000 r/min (2 poles)							
280	3GZF 294 730-749	2x 3GZF 294 730-613	**2x M63x1.5**	2x Ø32-49	2x150	M12	
315	3GZF 294 730-753	2x 3GZF 294 730-613	**2x M63x1.5**	2x Ø32-49	2x240	M12	
355 S	3GZF 294 730-759	3GZF 294 730-301		2x Ø48-60	4x240	M12	D
	-	3GZF 294 730-301		2x Ø48-60	2x240	M12	E
355 SM_	3GZF 294 730-759	3GZF 294 730-301		2x Ø48-60	4x240	M12	
355 ML_	3GZF 294 730-759	LNPB 3328		2x Ø60-80	4x240	M12	
400 M_	3GZF 294 730-759	LNPB 3328		2x Ø60-80	4x240	M12	
400 LK_	3GZF 294 730-759	LNPB 3328		2x Ø60-80	4x240	M12	
1500 r/min (4 poles)							
280	3GZF 294 730-749	2x 3GZF 294 730-613	**2x M63x1.5**	2x Ø32-49	2x150	M12	
315	3GZF 294 730-753	2x 3GZF 294 730-613	**2x M63x1.5**	2x Ø32-49	2x240	M12	
355 S	3GZF 294 730-759	3GZF 294 730-301		2x Ø48-60	4x240	M12	D
	-	3GZF 294 730-301		2x Ø48-60	2x240	M12	E
355 SM_	3GZF 294 730-759	3GZF 294 730-301		2x Ø48-60	4x240	M12	
355 ML_	3GZF 294 730-759	LNPB 3328		2x Ø60-80	4x240	M12	
400 M_	3GZF 294 730-759	LNPB 3328		2x Ø60-80	4x240	M12	
400 LKA	3GZF 294 730-759	LNPB 3328		2x Ø60-80	4x240	M12	D
	3GZF 294 730-759	LNPB 3328		2x Ø60-80	4x240	M12	E
400 LKB, LKC	3GZF 294 730-759	LNPB 3328		2x Ø60-80	4x240	M12	
1000 r/min (6 poles)							
280	3GZF 294 730-749	2x 3GZF 294 730-613	**2x M63x1.5**	2x Ø32-49	2x150	M12	
315	3GZF 294 730-753	2x 3GZF 294 730-613	**2x M63x1.5**	2x Ø32-49	2x240	M12	
355 S	-	3GZF 294 730-301		2x Ø48-60	2x240	M12	
355 SMB	3GZF 294 730-759	3GZF 294 730-301		2x Ø48-60	4x240	M12	D
	-	3GZF 294 730-301		2x Ø48-60	2x240	M12	E
355 MLA	3GZF 294 730-759	3GZF 294 730-301		2x Ø48-60	4x240	M12	
400 M	3GZF 294 730-759	LNPB 3328		2x Ø60-80	4x240	M12	D
	-	3GZF 294 730-301		2x Ø48-60	2x240	M12	E
400 MA, MB	3GZF 294 730-759	LNPB 3328		2x Ø60-80	4x240	M12	
400 LKA	3GZF 294 730-759	LNPB 3328		2x Ø60-80	4x240	M12	
400 LKB, LKC	3GZF 294 730-759	LNPB 3328		2x Ø60-80	4x240	M12	D
	3GZF 294 730-759	LNPB 3328		2x Ø60-80	4x240	M12	E
750 r/min (8 poles)							
280	3GZF 294 730-749	2x 3GZF 294 730-613	**2x M63x1.5**	2x Ø32-49	2x150	M12	
315	3GZF 294 730-753	2x 3GZF 294 730-613	**2x M63x1.5**	2x Ø32-49	2x240	M12	
355 S	-	3GZF 294 730-301		2x Ø48-60	2x240	M12	
355 MLA	-	3GZF 294 730-301		2x Ø48-60	2x240	M12	
355 MLC	3GZF 294 730-759	3GZF 294 730-301		2x Ø48-60	4x240	M12	D
	-	3GZF 294 730-301		2x Ø48-60	2x240	M12	E
400 M	-	3GZF 294 730-301		2x Ø48-60	2x240	M12	D
400 MA	3GZF 294 730-759	3GZF 294 730-301		2x Ø48-60	4x240	M12	D
	-	3GZF 294 730-301		2x Ø48-60	2x240	M12	E
400 LK_	3GZF 294 730-759	LNPB 3328		2x Ø60-80	4x240	M12	

Voltage/frequency codes:
D - 380-420 VΔ 50 Hz, 660-690 VY 50 Hz, 440-480 VΔ 60 Hz
E - 500 VΔ 50 Hz, 575 VΔ 60 Hz

Examples:

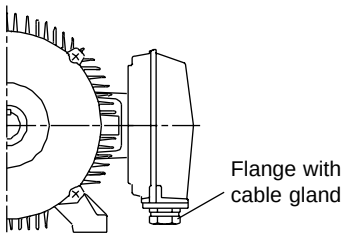

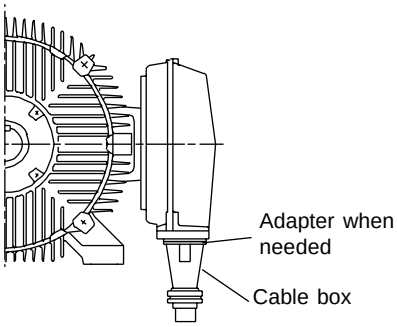

Auxiliary devices (view from N-end):

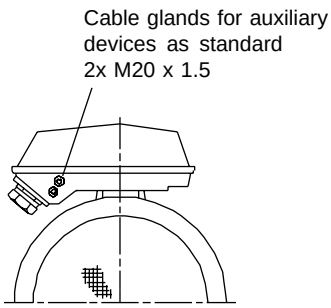

Technical data – Increased safety motors

EEx e II T3, Aluminium frame, sizes 63 to 250

IP 55, IC 411; Insulation class F, temperature rise class B

Output kW	Type designation	Product code	Speed r/min	Efficiency FL 100%	Power factor cos φ	Current I_N A	Current $\frac{I_s}{I_N}$	Torque T_N Nm	Torque $\frac{T_s}{T_N}$	Torque $\frac{T_{max}}{T_N}$	Time tE sec	Moment of inertia J=1/4 GD² kgm²	Weight kg	Sound pressure level LP dB(A)
3000 r/min = 2 poles			**400 V 50 Hz**											
0.25	**M2AA 63 B**	3GAA 061 502-••A	2750	67.0	0.78	0.7	4.1	0.9	2.0	2.3	19	0.0002	4.5	2)
0.37	**71 A**	071 501-••A	2810	69.0	0.76	1.1	4.5	1.3	2.2	2.7	16	0.0004	5.5	2)
0.55	**71 B**	071 502-••A	2800	72.0	0.78	1.4	4.7	1.9	2.3	2.7	14	0.0005	6.5	2)
0.75	**80 A**	081 501-••A	2850	77.0	0.80	1.8	5.3	2.5	2.1	2.7	10	0.0009	9	2)
1.1	**80 B**	081 502-••A	2850	79.0	0.81	2.5	6.0	3.7	2.4	3.0	7	0.0011	10	2)
1.3	**90 S**	091 501-••A	2870	80.0	0.81	2.9	5.8	4.3	2.4	3.1	10	0.0019	13	2)
2.1	**90 L**	091 502-••A	2870	83.0	0.84	4.4	7.2	7	2.5	3.3	7	0.0024	16	2)
2.5	**100 L**	101 501-••A	2890	85.0	0.84	5.1	8.2	8.2	3.0	4.0	8	0.0041	21	2)
3.5	**112 M**	111 001-••A	2890	86.0	0.90	6.5	8.8	12	3.2	3.5	5	0.01	25	63
4.5	**132 SB**	131 002-••A	2890	87.0	0.91	8.3	9.0	15	3.6	3.8	5	0.016	42	69
11	**160 MA**	161 101-••A	2930	91.2	0.88	20	6.6	36	1.9	2.5	11	0.039	73	69
15 1)	**160 M**	161 102-••A	2920	91.7	0.90	26.5	6.6	49	2.3	2.5	5.5	0.047	84	69
16	**160 L**	161 103-••A	2930	92.4	0.90	28	8.3	52	3.0	3.1	6	0.053	94	69
19	**180 M**	181 101-••A	2950	92.8	0.88	33	8.5	62	2.9	3.1	6	0.077	119	69
24	**200 MLA**	201 001-••A	2955	92.7	0.89	42	7.7	78	2.4	3.1	6.5	0.15	175	72
27	**200 MLB**	201 002-••A	2955	92.1	0.90	47	8.4	87	2.8	3.6	5.5	0.18	200	72
43	**225 SMB**	221 001-••A	2955	93.2	0.90	74	6.3	139	2.1	2.4	6.5	0.26	235	74
48	**250 SMA**	251 001-••A	2970	93.9	0.90	82	7.3	154	1.9	2.8	9	0.49	285	75
52	**250 SMB**	251 002-••A	2980	95.9	0.90	87	9.3	167	2.5	3.5	6.5	0.57	330	75
1500 r/min = 4 poles			**400 V 50 Hz**											
0.18	**M2AA 63 B**	3GAA 062 502-••A	1360	57.0	0.64	0.7	3.1	1.3	2.2	2.4	51	0.0003	4.5	2)
0.25	**71 A**	072 501-••A	1380	62.0	0.70	0.9	3.4	1.7	2.0	2.4	18	0.0007	5.5	2)
0.37	**71 B**	072 502-••A	1380	67.0	0.69	1.2	3.7	2.5	2.0	2.3	14	0.001	6.5	2)
0.55	**80 A**	082 501-••A	1400	71.0	0.77	1.5	4.4	3.7	2.0	2.5	11	0.0017	9	2)
0.75	**80 B**	082 502-••A	1400	74.0	0.79	1.9	4.7	5.1	2.4	2.8	9	0.0021	10	2)
1.1	**90 S**	092 501-••A	1400	78.0	0.77	2.7	4.5	7.5	2.0	2.4	14	0.0032	13	2)
1.5	**90 L**	092 502-••A	1420	80.0	0.77	3.6	5.4	10	2.5	3.0	14	0.0043	16	2)
2	**100 LA**	102 501-••A	1430	81.0	0.78	4.5	5.8	13	2.4	3.0	10	0.0069	21	2)
2.5	**100 LB**	102 502-••A	1430	84.0	0.82	5.3	6.2	17	2.5	3.0	8	0.0082	24	2)
4 1)	**112 M**	112 001-••A	1430	85.0	0.80	8.7	6.9	27	2.9	3.1	7	0.015	27	56
5.5 1)	**132 S**	132 001-••A	1450	87.0	0.83	10.9	7.3	36	2.2	3.0	9	0.031	40	59
7.5 1)	**132 M**	132 002-••A	1450	88.0	0.83	14.8	7.8	49	2.5	3.2	6	0.038	48	59
11 1)	**160 M**	162 101-••A	1460	90.3	0.81	21.5	6.5	72	2.9	2.8	10	0.067	75	62
15 1)	**160 L**	162 102-••A	1455	91.1	0.84	28.5	7.4	98	3.0	2.8	10	0.091	94	62
17 1)	**160 LB**	162 103-••A	1450	90.5	0.84	32	7.2	112	3.2	3.2	8	0.102	103	63
18.5 1)	**180 M**	182 101-••A	1470	92.3	0.84	35	6.8	120	3.1	2.7	13	0.161	124	62
22 1)	**180 L**	182 102-••A	1470	92.4	0.84	41	6.8	143	2.9	2.8	7.5	0.191	141	63
26	**180 LB**	182 103-••A	1470	92.5	0.82	49	8.2	169	3.7	3.2	5.5	0.225	161	63
26	**200 MLA**	202 001-••A	1470	92.7	0.84	49	6.5	169	2.4	2.6	6	0.29	180	63
35	**225 SMB**	222 002-••A	1480	94.3	0.85	63	7.5	226	2.8	2.7	9	0.37	215	66
39	**225 SMC**	222 003-••A	1480	94.9	0.86	69	7.7	252	3.5	3.2	7	0.42	230	66
46	**250 SMA**	252 001-••A	1480	94.2	0.86	82	7.0	297	2.2	2.7	6.5	0.72	275	67
53	**250 SMB**	252 002-••A	1480	94.5	0.87	93	7.6	342	2.8	3.4	6.5	0.88	335	67

1) Temperature rise class F. 2) On request.

Note: M2AA stocked motors cannot be restamped for 440 V 60 Hz; available during new production. Stocked motors with voltage code S and D can be restamped for 460 VY and voltage code D for 460 VD; except 2-pole type M2AA 132 SB and 2- and 4-pole M2AA 200-250 motors which need special winding.

The two bullets in the product code indicate choice of mounting arrangement (see ordering information), voltage and frequency (below).

Motor	S		D		H	E	F	T	U	X
size	50 Hz	60 Hz	50 Hz	60 Hz	50 Hz	50 Hz	50 Hz	50 Hz	50 Hz	
63-100	230 VΔ 400 VY	–	400 VΔ 690 VY	–	415 VΔ[a)]	500 VΔ	500 VY	660 VΔ[a)]	690 VΔ[a)]	Other rated voltage, connection or frequency,
112-250	230 VΔ 400 VY	460 VY	400 VΔ 690 VY	460 VΔ	415 VΔ	500 VΔ	–	660 VΔ	690 VΔ	690 V maximum

a) On request

Technical data – Increased safety motors

EEx e II T3, Aluminium frame, sizes 63 to 250

IP 55, IC 411; Insulation class F, temperature rise class B

Output kW	Type designation	Product code	Speed r/min	Efficiency FL 100%	Power factor cos φ	Current I_N A	Current I_s/I_N	Torque T_N Nm	Torque T_s/T_N	Torque T_{max}/T_N	Time tE sec	Moment of inertia J=1/4 GD² kgm²	Weight kg	Sound pressure level LP dB(A)
1000 r/min = 6 poles			**400 V 50 Hz**											
0.12	**M2AA 71**	3GAA 073 501-••A	920	51.0	0.59	0.6	2.5	1.2	2.2	2.6	80	0.0007	5	2)
0.18	**71 A**	073 502-••A	910	54.0	0.63	0.8	2.5	1.9	1.8	2.1	49	0.0007	5.5	2)
0.25	**71 B**	073 503-••A	900	59.0	0.66	1	2.6	2.6	1.9	2.2	59	0.0009	6.5	2)
0.37	**80 A**	083 501-••A	920	65.0	0.67	1.3	3.2	3.8	1.9	2.2	42	0.0017	8.5	2)
0.55	**80 B**	083 502-••A	920	70.0	0.66	1.8	3.2	5.7	2.0	2.3	32	0.0021	9.5	2)
0.65	**90 S**	093 501-••A	920	72.0	0.64	2.2	3.8	6.7	2.0	2.5	33	0.0032	13	2)
1	**90 L**	093 502-••A	920	74.0	0.66	3.1	3.8	10	1.8	2.2	20	0.0043	16	2)
1.5	**100 L**	103 501-••A	930	78.0	0.67	4.2	4.5	15	1.7	2.2	20	0.0082	23	2)
2.2 1)	**112 M**	113 001-••A	940	80.5	0.76	5.3	5.7	22	2.1	2.7	15	0.015	27	54
3	**132 S**	133 001-••A	960	84.5	0.76	6.9	7.0	30	2.4	2.6	14	0.031	39	61
4 1)	**132 MA**	133 002-••A	960	85.5	0.79	8.9	6.7	40	2.6	2.8	11	0.038	46	61
5.5 1)	**132 MB**	133 003-••A	960	86.0	0.81	11.5	7.1	55	2.8	2.8	9.5	0.045	54	61
7.5	**160 M**	163 101-••A	970	89.3	0.79	15.4	6.6	74	2.0	2.8	17	0.089	88	59
11 1)	**160 L**	163 102-••A	970	89.8	0.78	23	7.3	108	2.2	2.9	11.5	0.107	102	59
14 1)	**160 LB**	163 103-••A	980	89.1	0.74	30	8.4	136	2.7	3.1	7	0.127	117	62
15	**180 L**	183 101-••A	970	90.8	0.78	31	7.1	148	2.1	3.0	17	0.217	151	59
18.5 1)	**180 LB**	183 102-••A	965	90.6	0.79	37.5	6.3	183	2.0	2.6	8.5	0.237	160	59
18.5	**200 MLA**	203 001-••A	980	91.9	0.83	35	6.9	180	2.5	2.7	15	0.37	165	63
22	**200 MLB**	203 002-••A	980	91.1	0.83	42	7.3	214	2.5	2.7	13.5	0.43	185	63
30	**225 SMB**	223 001-••A	985	92.2	0.81	58	7.4	291	2.5	2.7	6.5	0.64	225	63
37	**250 SMA**	253 001-••A	990	93.0	0.82	70	6.9	357	2.8	2.8	9	1.16	280	63
45	**250 SMB**	253 002-••A	985	93.2	0.84	83	7.0	436	2.8	2.8	8.5	1.49	320	63
750 r/min = 8 poles			**400 V 50 Hz**											
0.12	**M2AA 80 A**	3GAA 084 501-••A	700	47.0	0.56	0.8	2.2	1.8	2.0	2.5	60	0.0017	8.5	2)
0.18	**80 B**	084 502-••A	700	48.0	0.56	1	2.4	2.5	2.0	2.5	45	0.0021	9.5	2)
0.37	**90 S**	094 501-••A	700	60.0	0.57	1.6	2.8	5.5	2.0	2.5	68	0.0031	13	2)
0.55	**90 L**	094 502-••A	700	64.0	0.57	2.3	3.1	7.5	2.1	2.6	70	0.0047	16	2)
0.75	**100 LA**	104 501-••A	700	70.0	0.59	2.7	3.4	10	2.0	2.6	56	0.0069	21	2)
1.1	**100 LB**	104 502-••A	700	72.0	0.63	3.5	3.7	15	1.8	2.3	47	0.0083	24	2)
4	**160 MA**	164 101-••A	715	84.1	0.69	10	5.0	53	2.1	2.4	20	0.072	75	59
5.5 1)	**160 M**	164 102-••A	710	84.7	0.70	13.4	5.1	74	2.4	2.6	19	0.091	88	59
7.5 1)	**160 L**	164 103-••A	715	86.3	0.70	18.1	5.2	100	2.4	2.8	20	0.131	118	59
8.5 1)	**160 LB**	164 104-••A	700	83.5	0.70	21	5.2	116	2.4	2.5	16	0.131	118	45
11	**180 L**	184 101-••A	720	88.7	0.76	23.5	5.3	146	2.4	2.6	30	0.224	147	59
13	**180 LB**	184 102-••A	725	88.0	0.74	28	6.1	171	2.9	3.0	14	0.24	155	62
15	**200 MLA**	204 001-••A	735	90.2	0.80	30	7.2	195	1.8	3.0	17	0.45	175	60
18.5	**225 SMA**	224 001-••A	735	89.0	0.75	40	6.5	240	1.6	2.5	17	0.61	210	63
22	**225 SMB**	224 002-••A	735	90.1	0.75	47	6.1	286	1.9	2.7	19	0.68	225	63
30 1)	**250 SMA**	254 001-••A	740	92.2	0.77	61	7.1	387	1.9	2.9	15	1.25	280	63
37	**250 SMB**	254 002-••A	735	91.4	0.80	73	7.4	481	2.0	2.9	15	1.52	320	63

1) Temperature rise class F.

Note: M2AA stocked motors cannot be restamped for 440 V 60 Hz; available during new production. Stocked motors with voltage code S and D can be restamped for 460 VY and voltage code D for 460 VD; except 2-pole type M2AA 132 SB and 2- and 4-pole M2AA 200-250 motors which need special winding.

The two bullets in the product code indicate choice of mounting arrangement (see ordering information), voltage and frequency (below).

Motor size	S 50 Hz	S 60 Hz	D 50 Hz	D 60 Hz	H 50 Hz	E 50 Hz	F 50 Hz	T 50 Hz	U 50 Hz	X
63-100	230 VΔ 400 VY	–	400 VΔ 690 VY	–	415 VΔ a)	500 VΔ	500 VY	660 VΔ a)	690 VΔ a)	Other rated voltage, connection or frequency,
112-250	230 VΔ 400 VY	460 VY	400 VΔ 690 VY	460 VΔ	415 VΔ	500 VΔ	–	660 VΔ	690 VΔ	690 V maximum

a) On request

Technical data – Increased safety motors

Aluminium frame, sizes 63 to 250

IP 55, IC 411; Insulation class F, temperature rise class B

Output kW	Type designation	Product code	Speed r/min	Efficiency FL 100%	Power factor cos φ	Current I_N A	Current $\frac{I_s}{I_N}$	Torque T_N Nm	Torque $\frac{T_s}{T_N}$	Torque $\frac{T_{max}}{T_N}$	Time tE sec	Moment of inertia J=1/4 GD² kgm²	Weight kg	Sound pressure level LP dB(A)
1500 r/min = 4 poles			**400 V 50 Hz**									**EEx e II T4**		
0.12	**M2AA 71**	3GAA 073 501-••A	920	51.0	0.59	0.6	2.5	1.2	2.2	2.6	80	0.0007	5	
0.45	**71 B**	071 503-••A	2860	72	0.72	1.3	5.6	1.5	3.1	3.6	7	0.0005	6.5	
0.65	**80 B**	081 503-••A	2860	78	0.87	1.4	5.5	2.2	2.1	2.7	9	0.0011	10	
1.4	**90 L**	091 503-••A	2900	84	0.86	2.9	7.6	4.6	2.6	3.5	6	0.0024	16	
2	**100 L**	101 503-••A	2910	85	0.87	4.0	8.0	6.6	2.8	3.8	5	0.0041	21	
1500 r/min = 4 poles			**400 V 50 Hz**									**EEx e II T4**		
0.25	**M2AA 71 B**	3GAA 072 503-••A	1400	68	0.71	0.76	4.0	1.7	2.5	2.9	12	0.001	6.5	
0.45	**80 B**	082 503-••A	1440	75	0.65	1.4	5.4	3.0	3.0	3.6	8	0.0021	10	
1.2	**90 L**	092 503-••A	1430	80	0.74	3.0	5.8	8.0	2.7	3.3	8	0.0043	16	
2	**100 LB**	102 503-••A	1440	84	0.76	4.5	7.0	13	3.4	4.1	5	0.0082	24	
1000 r/min = 6 poles			**400 V 50 Hz**									**EEx e II T4**		
0.18	**M2AA 71 B**	3GAA 073 504-••A	900	60	0.64	0.7	2.9	1.9	2.1	2.4	50	0.0009	6.5	
0.4	**80 B**	083 503-••A	930	72	0.65	1.3	3.6	4.1	2.1	2.6	21	0.0021	9.5	
0.7	**90 L**	093 503-••A	940	75	0.61	2.3	4.1	7.1	2.0	2.6	15	0.0043	16	
1.3	**100 L**	103 503-••A	950	79	0.62	3.9	4.9	13	2.0	2.7	9	0.0082	23	
3000 r/min = 2 poles			**400 V 50 Hz**									**EEx e II T5**		
0.3	**M2AA 71 B**	3GAA 071 504-••A	2850	73	0.77	0.77	5.8	1.0	3.2	3.6	6	0.0005	6.5	
0.45	**80 B**	081 504-••A	2880	79	0.85	0.98	6.3	1.5	2.3	3.1	7	0.0011	10	
0.75	**90 L**	091 504-••A	2880	82	0.89	1.5	6.3	2.5	2.0	3.0	10	0.0024	16	
1.1	**100 L**	101 504-••A	2910	83	0.87	2.3	8.2	3.6	2.6	4	5	0.0041	21	
1500 r/min = 4 poles			**400 V 50 Hz**									**EEx e II T5**		
0.15	**M2AA 71 B**	3GAA 072 504-••A	1390	66	0.75	0.45	4.0	1.0	2.2	2.6	14	0.001	6.5	
0.3	**80 B**	082 504-••A	1440	75	0.63	0.92	5.4	2.0	3.1	4.0	7	0.0021	10	
0.75	**90 L**	092 504-••A	1430	80	0.78	1.8	5.8	5.0	2.5	3.2	9	0.0043	16	
1.1	**100 LB**	102 504-••A	1460	83	0.78	2.5	7.6	7.2	3.0	4.0	8	0.0082	24	
1000 r/min = 6 poles			**400 V 50 Hz**									**EEx e II T5**		
0.11	**M2AA 71 B**	3GAA 073 505-••A	920	61	0.61	0.45	3.0	1.1	2.3	2.7	54	0.0009	6.5	
0.3	**80 B**	083 504-••A	940	73	0.61	1.1	3.6	3.0	2.3	2.9	14	0.0021	9.5	
0.45	**90 L**	093 504-••A	950	76	0.58	1.6	4.5	4.5	2.1	2.9	14	0.0043	16	
0.9	**100 L**	103 504-••A	950	80	0.66	2.5	5.0	9.0	1.9	2.6	9	0.0082	23	

Data for bigger frame sizes in temperature class T4 and T5 on request.

The two bullets in the product code indicate choice of mounting arrangement (see ordering information), voltage and frequency (below).

Motor size	S 50 Hz	S 60 Hz	D 50 Hz	D 60 Hz	H 50 Hz	E 50 Hz	F 50 Hz	T 50 Hz	U 50 Hz	X
63-100	230 VΔ 400 VY	–	400 VΔ 690 VY	–	415 VΔ[1)]	500 VΔ	500 VY	660 VΔ[1)]	690 VΔ[1)]	Other rated volt., conn. freq.,690 V maximum

[1)] On request

Technical data – Increased safety motors

EEx e II T3, Aluminium frame, sizes 63 to 250, two-speed

IP 55, IC 411; Insulation class F, temperature rise class B

Output kW	Motor type M2AA	Product code 3GAA	Speed n r/min	Effi-ciency %	Power factor cos φ	Current I_N A	Current $\frac{I_s}{I_N}$	Torque T Nm	Torque $\frac{T_s}{T_N}$	Torque $\frac{T_{max}}{T_N}$	Time tE sec	Moment of inertia J = 1/4GD² kgm²	Weight kg	Sound press. level Lp dB(A)
3000 r/min = 2-4 poles			**400 V 50 Hz**				**One stator winding (YY/Y Dahlander-connection)**							
0.4/0.08	**71B**	078 501-••A	2860/1450	70/44	0.77/0.54	1.1/0.51	4.7/2.9	1.34/0.53	2.0/1.8	2.7/3.1	18/78	0.0005	6.5	55/45
0.6/0.12	**80A**	088 501-••A	2860/1450	73/50	0.83/0.57	1.5/0.58	4.3/3.4	2.0/0.8	1.6/1.4	4.4/2.8	11/52	0.0009	9	58/48
0.85/0.17	**80B**	088 502-••A	2860/1450	77/58	0.85/0.58	1.9/0.71	5.2/3.8	2.8/1.12	1.8/1.5	2.6/3.0	9/42	0.0011	10	58/48
1.2/0.24	**90S**	098 501-••A	2860/1460	79/64	0.82/0.59	2.7/0.95	5.9/4.5	4.0/1.6	2.1/1.4	2.8/3.2	10/43	0.0019	13	63/50
1.75/0.35	**90L**	098 502-••A	2870/1460	82/70	0.84/0.59	3.8/1.2	6.7/5.4	5.8/2.3	2.6/1.3	3.2/3.1	6/28	0.0024	16	63/50
2.5/0.5	**100L**	108 501-••A	2890/1470	83/71	0.86/0.55	5.2/1.9	6.8/5.2	8.3/3.3	2.3/1.5	3.2/3.6	9/33	0.0041	21	68/54
1500 r/min = 4-6 poles			**400 V 50 Hz**				**Two stator windings (Y/Y Dahlander-connection)**							
0.33/0.11	**80A**	088 503-••A	1420/950	65/50	0.77/0.61	0.96/0.53	3.9/2.7	2.2/1.2	1.6/1.5	2.2/2.4	41/110	0.0017	8.5	48/43
0.45/0.15	**80B**	088 504-••A	1420/960	68/54	0.78/0.60	1.3/0.68	3.7/2.8	3.0/1.5	1.6/1.6	2.2/2.5	26/76	0.0021	9.5	48/43
0.6/0.2	**90S**	098 503-••A	1430/950	71/56	0.76/0.63	1.7/0.84	4.6/3.0	4.0/2.0	1.7/1.3	2.4/2.3	20/53	0.0032	13	50/44
0.9/0.3	**90L**	098 504-••A	1430/960	75/60	0.76/0.62	2.4/1.2	4.9/3.3	6.0/3.0	1.8/1.4	2.5/2.4	11/29	0.0043	16	50/44
1.2/0.4	**100LA**	108 502-••A	1450/970	76/64	0.78/0.58	3.0/1.6	5.6/3.8	7.9/4.0	1.8/1.5	2.6/2.8	10/18	0.0069	21	54/49
1.5/0.5	**100LB**	108 503-••A	1450/970	79/66	0.76/0.53	3.6/2.2	5.0/3.9	9.9/4.9	2.0/1.6	3.0/3.0	9/15	0.0082	24	54/49
1500 r/min = 4-8 poles			**400 V 50 Hz**				**One stator winding (YY/Y Dahlander-connection)**							
0.35/0.07	**71B**	078 502-••A	1400/700	66/37	0.71/0.57	1.1/0.48	3.6/2.2	2.4/0.96	1.8/1.7	2.3/2.2	28/330	0.0009	6.5	45/39
0.45/0.09	**80A**	088 505-••A	1400/700	68/45	0.79/0.57	1.2/0.51	3.8/2.3	3.1/1.25	1.7/1.5	2.2/2.2	35/410	0.0017	8.5	48/44
0.7/0.14	**80B**	088 506-••A	1400/700	71/48	0.80/0.59	1.9/0.69	4.1/2.5	4.8/1.9	1.8/1.7	2.2/2.2	22/235	0.0021	9.5	48/44
1.0/0.2	**90S**	098 505-••A	1410/710	73/48	0.78/0.56	2.6/1.1	4.7/2.5	6.8/2.7	1.9/1.4	2.4/2.3	13/88	0.0032	13	50/43
1.4/0.28	**90L**	098 506-••A	1420/710	77/51	0.78/0.52	3.5/1.5	4.5/2.8	9.4/3.8	2.0/1.5	2.5/2.5	11/86	0.0043	16	50/43
1.7/0.35	**100LA**	108 504-••A	1430/710	79/60	0.81/0.54	4.0/1.6	5.5/3.2	11.0/4.7	1.8/1.1	2.5/2.2	11/86	0.0069	21	54/46
2.2/0.45	**100LB**	108 505-••A	1430/710	81/63	0.80/0.53	5.0/2.0	5.8/3.2	15.0/6.0	1.8/1.1	2.5/2.2	8/62	0.0082	24	54/46

Data for bigger frame sizes on request.

The two bullets in the product code indicate choice of mounting arrangement (see ordering information), voltage and frequency (below).

Motor size	S	D	E	X
63-100	230 V 50 Hz	400 V 50 Hz	500 V 50 Hz	Other rated voltage, connection, or frequency, 690 V maximum

Technical data – Increased safety motors

EEx e II T3, Cast iron frame, sizes 80 to 400

IP 55, IC 411; Insulation class F, temperature rise class B - acc. to EN

Output kW	Type designation	Product code	Speed r/min	Efficiency FL 100%	Power factor cos φ	Current I_N A	Current $\frac{I_s}{I_N}$	Torque T_N Nm	Torque $\frac{T_s}{T_N}$	Torque $\frac{T_{max}}{T_N}$	Time tE sec	Moment of inertia J=1/4 GD² kgm²	Weight kg	Sound pressure level LP dB(A)
3000 r/min = 2 poles			**400 V 50 Hz**											
0.75	**M2BA 80 M2 AR**	3GTA 081 310-••A	2820	77.0	0.85	1.8	5.5	2.5	2.3	2.4	25	0.0007	13	[1]
1.1	**80 M2 BR**	081 320-••A	2820	80.0	0.84	2.4	6.0	3.7	2.9	3.0	13	0.0009	15	[1]
1.3	**90 S2 BR**	091 120-••A	2860	80.0	0.88	2.7	5.8	4.3	2.6	2.8	16	0.0016	19	[1]
1.85	**90 L2 BR**	091 520-••A	2880	82.0	0.87	3.8	6.5	6.1	2.7	2.9	11	0.002	21	[1]
2.5	**100 L2 AR**	101 510-••A	2870	80.0	0.87	5.3	6.4	8.3	2.1	2.3	8	0.0028	31	[1]
3.3	**112 M2 AR**	111 310-••A	2870	82.0	0.91	6.4	6.0	11	1.7	2.0	11	0.0055	43	[1]
4.6	**132 S2 AR**	131 110-••A	2900	81.0	0.90	9.5	6.7	15	2.7	2.9	12	0.01	62	[1]
5.5	**132 S2 BR**	131 120-••A	2920	81.0	0.91	10.7	7.2	18	2.8	3.1	10	0.013	74	[1]
8	**M3HP 160 MLB**	3GHP 161 420-••G	2940	88.7	0.91	14.5	7.3	26	2.8	3.5	12	0.047	156	76
11	**160 MLC**	161 430-••G	2943	90.5	0.92	19	7.4	36	2.6	3.4	12	0.054	167	76
12.5	**160 MLD**	161 440-••G	2942	90.8	0.92	22	7.8	41	2.8	3.4	8	0.059	173	76
15	**180 MLB**	181 420-••G	2952	90.7	0.91	26	7.6	49	2.4	3.3	10	0.092	210	77
18	**180 MLC**	181 430-••G	2952	91.5	0.91	31	7.6	58	2.5	3.3	8	0.114	229	77
22	**200 MLC**	201 430-••G	2956	91.9	0.91	38.5	7.0	71	2.6	3.5	8	0.21	305	75
25	**200 MLE**	201 450-••G	2960	92.5	0.91	43	7.7	81	2.8	3.7	8	0.22	310	75
30	**225 SMB**	221 220-••G	2966	93.1	0.91	51	7.7	97	2.1	3.0	9	0.31	365	77
36	**225 SMD**	221 240-••G	2964	93.6	0.91	60	7.9	116	2.3	3.2	5	0.36	395	77
40	**250 SMB**	251 220-••G	2971	93.9	0.91	67	7.7	129	1.9	3.1	8	0.66	475	75
47	**250 SMC**	251 230-••G	2971	94.3	0.90	80	7.8	151	2.3	3.0	7	0.69	495	75
60	**M2BA 280 SMA**	3GBA 281 210-••A	2975	94.2	0.91	101	7.2	193	1.2	2.9	8	0.8	590	[1]
75	**280 SMB**	281 220-••A	2975	94.8	0.91	125	7.4	241	1.2	2.9	6	0.9	630	[1]
80	**280 SMC**	281 230-••A	2975	95.0	0.92	132	7.6	257	1.2	2.8	6	1.15	690	[1]
77	**315 SMA**	311 210-••A	2981	95.0	0.91	130	7.0	247	0.9	2.9	7	1.2	860	[1]
90	**315 SMB**	311 220-••A	2981	95.2	0.92	150	6.9	288	0.9	2.8	7	1.4	920	[1]
120	**315 SMC**	311 230-••A	2981	95.8	0.92	197	7.0	384	1.0	2.9	6	1.7	1010	[1]
135	**315 MLA**	311 410-••A	2981	96.1	0.93	220	7.1	432	1.1	2.8	6	2.1	1170	[1]
165	**355 S**	351 100-••A	2978	95.4	0.93	270	6.3	529	0.9	2.5	7	3.8	1550	83
190	**355 SMA**	351 210-••A	2978	95.6	0.93	310	6.5	609	0.9	2.6	6	4.8	1750	83
215	**355 MLA**	351 410-••A	2980	95.8	0.94	345	6.9	689	0.9	2.5	9	6	2150	83
215	**400 M**	401 300-••A	2980	95.8	0.94	345	6.9	689	0.9	2.5	9	6	2200	83
300	**400 LKA**	401 510-••A	2980	96.2	0.93	480	7.0	961	0.8	3.2	5	7.5	2850	85

[1] On request

Notes:
- **When ordering sizes 160-200 with lifetime lubrication, variant code 195 'Bearings greased for life' has to be added**

Data for other voltages and frequencies, on request.

The two bullets in the product code indicate choice of mounting arrangement (see ordering information), voltage and frequency (below).

S [a)b)]	D [a)b)]	A [a)]	B [a)]	E	F	G	H	T	U	X
400VY 50Hz 230VD 50Hz	400VΔ50Hz 690VY 50Hz	380VY 50Hz 220VD 50Hz	380VΔ50Hz 660VY 60Hz	500VΔ50 Hz	500VY 50Hz	415VY 50Hz	415VΔ50Hz	660VΔ50Hz	690VΔ50Hz	Other rated volt. conn. or freq. max. 690 V

[a)] Motor sizes 80-250: For wide range voltage acc. to IEC 38 please apply variant code 002: Restamping of voltage. Data for wide range voltage can be taken from page 61-62.
[b)] Motor sizes 80-250: For fixed voltages 230 VΔ and 400 VΔ please apply variant code 002: Restamping of voltage.

Technical data – Increased safety motors

EEx e II T3, Cast iron frame, sizes 80 to 400

IP 55, IC 411; Insulation class F, temperature rise class B - acc. to EN

Output kW	Type designation	Product code	Speed r/min	Efficiency FL 100%	Power factor cos φ	Current I_N A	Current $\frac{I_s}{I_N}$	Torque T_N Nm	Torque $\frac{T_s}{T_N}$	Torque $\frac{T_{max}}{T_N}$	Time tE sec	Moment of inertia J=1/4 GD² kgm²	Weight kg	Sound pressure level LP dB(A)
1500 r/min = 4 poles			**400 V 50 Hz**											
0.55	**M2BA 80 M4 AR**	3GTA 082 310-••A	1400	71.0	0.75	1.5	4.0	3.7	2.0	2.1	32	0.0011	13	[1]
0.75	**80 M4 BR**	082 320-••A	1405	75.0	0.74	2	4.3	5.1	2.3	2.4	18	0.0015	15	[1]
1	**90 S4 BR**	092 120-••A	1420	78.0	0.78	2.4	5.0	6.7	2.2	2.4	17	0.0025	18	[1]
1.35	**90 L4 BR**	092 520-••A	1420	80.0	0.75	3.2	5.7	9.1	2.3	2.7	18	0.0033	21	[1]
2	**100 L4 AR**	102 510-••A	1430	79.0	0.78	4.8	5.6	13.3	2.2	2.4	12	0.0045	27	[1]
2.5	**100 L4 BR**	102 520-••A	1435	81.0	0.77	6	6.0	16.6	2.5	2.7	11	0.006	30	[1]
3.6	**112 M4 AR**	112 310-••A	1440	84.0	0.83	7.7	7.0	24	2.8	3.0	12	0.012	43	[1]
5	**132 S4 AR**	132 110-••A	1440	86.0	0.84	10	6.2	33	2.6	2.8	10	0.023	62	[1]
6.8	**132 M4 AR**	132 310-••A	1440	87.0	0.88	13.2	6.2	45	2.3	2.5	10	0.032	74	[1]
11	**M3HP 160 MLC**	3GHP 162 430-••G	1463	90.8	0.83	21	7.0	72	2.6	3.1	10	0.09	166	65
15	**160 MLE**	162 450-••G	1468	91.6	0.83	29	8.1	98	3.1	3.6	6	0.121	189	68
17	**180 MLB**	182 420-••G	1475	92.2	0.83	32	7.3	110	2.6	3.2	9	0.191	214	66
20	**180 MLC**	182 430-••G	1476	92.9	0.82	38	7.4	129	2.7	3.1	8	0.239	233	66
26	**200 MLA**	202 410-••G	1479	92.6	0.87	47	7.7	167	1.9	3.1	10	0.3	280	74
30	**200 MLB**	202 420-••G	1475	92.8	0.87	54	7.8	194	1.9	3.0	7	0.35	305	74
38	**225 SMB**	222 220-••G	1479	93.5	0.89	66	7.9	245	1.7	3.1	7	0.45	365	74
43	**225 SMC**	222 230-••G	1479	93.6	0.89	76	7.9	277	1.7	3.0	5	0.53	390	74
50	**250 SMA**	252 210-••G	1482	93.8	0.87	88	7.3	322	1.5	3.1	8	0.77	425	73
60	**250 SMB**	252 220-••G	1483	94.5	0.88	105	7.4	386	1.7	3.2	5	0.98	470	73
65	**M2BA 280 SMA**	3GBA 282 210-••A	1485	94.9	0.88	113	7.4	418	1.5	3.0	7	1.25	590	[1]
75	**280 SMB**	282 220-••A	1484	95.1	0.90	128	7.5	483	1.5	3.0	7	1.5	630	[1]
82	**280 SMC**	282 230-••A	1483	95.3	0.91	136	7.4	528	1.5	2.8	7	1.85	690	[1]
95	**315 SMA**	312 210-••A	1488	95.5	0.91	160	7.0	610	1.1	2.5	7	2.3	870	[1]
110	**315 SMB**	312 220-••A	1487	95.6	0.90	185	7.0	706	1.1	2.6	6	2.6	925	[1]
128	**315 SMC**	312 230-••A	1487	95.8	0.90	215	7.0	822	1.1	2.6	6	2.9	970	[1]
145	**315 MLA**	312 410-••A	1487	96.0	0.91	242	7.2	931	1.2	2.6	6	3.5	1080	[1]
180	**355 S**	352 100-••A	1490	96.0	0.88	310	6.3	1153	1.2	2.7	8	6.5	1550	80
220	**355 SMA**	352 210-••A	1490	96.3	0.89	375	6.4	1410	1.2	2.7	7	8.2	1800	80
275	**355 MLA**	352 410-••A	1488	96.5	0.89	465	6.4	1764	1.3	2.6	6	10	2100	80
275	**400 M**	402 300-••A	1488	96.5	0.89	465	6.4	1764	1.3	2.6	6	10	2150	80
330	**400 LKA**	402 510-••A	1490	96.6	0.91	545	6.6	2115	1.0	2.7	6	12	2900	85

[1] On request

Notes:
- When ordering sizes 160-200 with lifetime lubrication, variant code 195 'Bearings greased for life' has to be added

Data for other voltages and frequencies, on request.

The two bullets in the product code indicate choice of mounting arrangement (see ordering information), voltage and frequency (below).

S [a)b)]	D [a)b)]	A [a)]	B [a)]	E	F	G	H	T	U	X
400VY 50Hz 230VD 50Hz	400VΔ50Hz 690VY 50Hz	380VY 50Hz 220VD 50Hz	380VΔ50Hz 660VY 60Hz	500VΔ50 Hz	500VY 50Hz	415VY 50Hz	415VΔ50Hz	660VΔ50Hz	690VΔ50Hz	Other rated volt. conn. or freq. max. 690 V

[a)] Motor sizes 80-250: For wide range voltage acc. to IEC 38 please apply variant code 002: Restamping of voltage.
Data for wide range voltage can be taken from page 61-62.
[b)] Motor sizes 80-250: For fixed voltages 230 VΔ and 400 VΔ please apply variant code 002: Restamping of voltage.

Technical data – Increased safety motors

EEx e II T3, Cast iron frame, sizes 80 to 400

IP 55, IC 411; Insulation class F, temperature rise class B - acc. to EN

Output kW	Type designation	Product code	Speed r/min	Efficiency FL 100%	Power factor cos φ	Current I_N A	Current I_s/I_N	Torque T_N Nm	Torque T_s/T_N	Torque T_{max}/T_N	Time tE sec	Moment of inertia J=1/4 GD² kgm²	Weight kg	Sound pressure level LP dB(A)
1000 r/min = 6 poles			**400 V 50 Hz**											
0.37	**M2BA 80 M6 AR**	3GTA 083 310-••A	975	73.0	0.68	1.1	3.9	3.8	2.3	2.2	63	0.0023	10	[1]
0.55	**80 M6 BR**	083 320-••A	975	72.0	0.71	1.6	3.8	6.8	2.2	2.1	46	0.0029	11	[1]
0.7	**90 S6 BR**	093 120-••A	930	74.0	0.72	1.9	3.9	7.1	2.0	2.0	38	0.004	16	[1]
0.95	**90 L6 BR**	093 520-••A	930	76.0	0.69	2.7	4.3	8.7	2.4	2.2	26	0.0065	18	[1]
1.3	**100 L6 BR**	103 520-••A	955	79.0	0.72	3.2	5.5	13	2.5	2.3	25	0.01	22	[1]
1.9	**112 M6 AR**	113 310-••A	955	84.0	0.76	4.3	6.2	16.8	2.4	2.4	24	0.01	34	[1]
2.6	**132 S6 AR**	133 110-••A	965	84.0	0.77	5.7	6.8	25.7	2.4	2.7	20	0.032	48	[1]
3.5	**132 M6 AR**	133 310-••A	965	86.0	0.81	7.4	6.1	34.8	2.2	2.6	18	0.038	56	[1]
6.6	**M3HP 160 MLA**	3GHP 163 410-••G	972	88.9	0.77	13.8	7.3	65	2.1	3.4	17	0.088	160	64
7.5	**160 MLB**	163 420-••G	973	89.6	0.77	15.5	7.4	74	2.1	3.6	17	0.106	173	64
11	**160 MLC**	163 430-••G	972	89.1	0.76	23.5	7.8	108	2.6	3.8	10	0.127	188	64
14	**180 MLB**	183 420-••G	973	90.8	0.77	29	7.0	137	1.8	3.0	10	0.221	233	67
16.5	**200 MLB**	203 420-••G	984	91.5	0.83	32	7.4	160	3.2	3.3	17	0.47	290	70
20	**200 MLC**	203 430-••G	983	91.6	0.84	38	7.2	194	3.0	2.7	10	0.52	305	70
30	**225 SMC**	223 230-••G	986	93.2	0.83	56	7.4	290	2.9	3.0	9	0.78	380	64
37	**250 SMB**	253 220-••G	988	94.0	0.86	66	7.2	358	2.6	2.8	8	1.6	465	64
45	**M2BA 280 SMA**	3GBA 283 210-••A	988	94.1	0.87	79	7.6	435	1.5	2.8	6	1.85	570	[1]
50	**280 SMB**	283 220-••A	987	94.2	0.88	86	7.0	484	1.4	2.5	6	2.2	610	[1]
62	**280 SMC**	283 230-••A	987	94.6	0.88	107	7.3	600	1.5	2.6	6	2.85	690	[1]
72	**315 SMA**	313 210-••A	992	94.6	0.86	128	7.0	693	1.3	2.5	7	3.2	820	[1]
85	**315 SMB**	313 220-••A	991	94.9	0.87	148	7.0	819	1.3	2.4	6	4.1	910	[1]
100	**315 SMC**	313 230-••A	991	95.3	0.86	176	7.2	964	1.5	2.6	6	4.9	980	[1]
120	**315 MLA**	313 410-••A	991	95.5	0.86	212	7.2	1156	1.5	2.5	5	5.8	1100	[1]
145	**355 S**	353 100-••A	993	95.5	0.85	260	6.4	1394	1.3	2.5	6	10.4	1550	75
175	**355 SMA**	353 210-••A	993	95.8	0.84	315	6.8	1683	1.4	2.6	6	12.5	1800	75
225	**355 MLA**	353 410-••A	993	96.1	0.85	400	6.7	2163	1.4	2.6	6	14.6	2100	75
225	**400 MA**	403 310-••A	993	96.1	0.85	400	6.7	2163	1.4	2.6	6	14.6	2150	75
290	**400 LKA**	403 510-••A	992	96.3	0.86	510	5.8	2792	1.2	2.6	6	16.5	2800	80
350	**400 LKB**	403 520-••A	993	96.4	0.87	600	6.1	3366	1.2	2.6	6	19	3050	80

[1] On request

Notes:
- **When ordering sizes 160-200 with lifetime lubrication, variant code 195 'Bearings greased for life' has to be added**

Data for other voltages and frequencies, on request.

Technical data – Increased safety motors

EEx e II T3, Cast iron frame, sizes 80 to 400

IP 55, IC 411; Insulation class F, temperature rise class B - acc. to EN

Output kW	Type designation	Product code	Speed r/min	Efficiency FL 100%	Power factor cos φ	Current I_N A	Current I_s/I_N	Torque T_N Nm	Torque T_s/T_N	Torque T_{max}/T_N	Time tE sec	Moment of inertia J=1/4 GD² kgm²	Weight kg	Sound pressure level LP dB(A)
750 r/min = 8 poles			**400 V 50 Hz**											
0.25	**M2BA 80 M8 AR**	3GTA 084 310-••A	625	62.0	0.64	0.91	2.7	3.5	2.0	2.2	90	0.002	9.5	44
0.37	**80 M8 BR**	084 320-••A	690	62.0	0.57	1.5	3.1	5.1	2.7	2.9	90	0.0026	11	44
0.55	**90 L8 AR**	094 510-••A	680	63.0	0.68	1.7	3.1	7.7	1.8	2.0	90	0.0055	17	47
0.65	**100 L8 AR**	104 510-••A	705	70.0	0.64	2.1	3.6	8.8	2.0	2.2	35	0.008	22	54
0.95	**100 L8 BR**	104 520-••A	705	73.0	0.65	2.9	3.8	12.7	2.0	2.2	26	0.0105	26	54
1.3	**112 M8 AR**	114 310-••A	715	79.0	0.64	3.7	4.7	17.4	2.5	2.8	34	0.018	45	54
1.9	**132 S8 AR**	134 110-••A	705	80.0	0.78	4.4	4.3	25.7	1.8	2.0	35	0.03	64	54
2.6	**132 M8 AR**	134 310-••A	710	83.0	0.78	6.1	4.8	35	2.2	2.4	32	0.04	77	52
3.5	**M3HP 160 MLA**	3GHP 164 410-••G	719	83.1	0.69	8.9	5.1	46	1.8	2.9	20	0.071	146	59
4.8	**160 MLB**	164 420-••G	716	83.4	0.70	11.8	5.1	64	1.8	2.7	20	0.09	160	59
6.6	**160 MLC**	164 430-••G	716	85.7	0.70	16.2	5.6	88	1.8	3.0	16	0.121	188	59
9.7	**180 MLB**	184 420-••G	727	90.1	0.74	21	5.9	127	1.7	2.8	17	0.239	227	63
15	**200 MLB**	204 420-••G	736	90.8	0.79	30.5	7.0	195	2.2	3.4	20	0.54	300	64
22	**225 SMC**	224 230-••G	734	91.5	0.80	43.5	6.9	286	2.1	3.3	22	0.75	375	65
27	**250 SMA**	254 210-••G	736	91.9	0.82	51	6.6	350	1.9	2.8	21	1.25	420	65
32	**250 SMB**	254 220-••G	737	92.4	0.82	61	7.0	415	2.0	2.9	13	1.52	465	65
37	**M2BA 280 SMA**	3GBA 284 210-••A	741	93.0	0.80	72	6.7	477	1.5	2.6	10	1.85	570	[1]
45	**280 SMB**	284 220-••A	741	93.4	0.79	88	7.3	580	1.7	2.9	7	2.2	610	[1]
55	**280 SMC**	284 230-••A	741	94.0	0.80	105	7.8	709	1.8	3.0	5	2.85	690	[1]
55	**315 SMA**	314 210-••A	743	94.3	0.80	105	6.2	707	1.2	2.2	12	3.2	820	[1]
75	**315 SMB**	314 220-••A	743	94.8	0.80	142	6.5	964	1.3	2.2	7	4.1	910	[1]
90	**315 SMC**	314 230-••A	743	95.0	0.81	173	6.4	1157	1.4	2.2	7	4.9	980	[1]
105	**315 MLA**	314 410-••A	742	95.3	0.81	197	6.5	1351	1.4	2.2	5	5.8	1100	[1]
120	**355 S**	354 100-••A	743	95.0	0.79	230	6.2	1542	1.4	2.2	10	10.4	1550	75
145	**355 SMA**	354 210-••A	743	95.4	0.80	275	6.5	1863	1.5	2.2	6	12.5	1800	75
180	**355 MLA**	354 410-••A	744	95.7	0.77	350	6.5	2310	1.4	2.4	6	14.6	2150	75
180	**400 M**	404 300-••A	744	95.7	0.77	350	6.5	2310	1.4	2.4	6	14.6	2150	75
230	**400 LKA**	404 510-••A	745	96.1	0.80	430	6.5	2948	1.4	2.7	6	16.5	2800	80
280	**400 LKB**	404 520-••A	745	96.2	0.81	520	6.1	3589	1.3	2.6	6	19	3050	80

[1] On request

Notes:
- **When ordering sizes 160-200 with lifetime lubrication, variant code 195 'Bearings greased for life' has to be added**

Data for other voltages and frequencies, on request.

The two bullets in the product code indicate choice of mounting arrangement (see ordering information), voltage and frequency (below).

S [a)b)]	D [a)b)]	A [a)]	B [a)]	E	F	G	H	T	U	X
400VY 50Hz 230VD 50Hz	400VΔ50Hz 690VY 50Hz	380VY 50Hz 220VD 50Hz	380VΔ50Hz 660VY 60Hz	500VΔ50 Hz	500VY 50Hz	415VY 50Hz	415VΔ50Hz	660VΔ50Hz	690VΔ50Hz	Other rated volt. conn. or freq. max. 690 V

[a)] Motor sizes 80-250: For wide range voltage acc. to IEC 38 please apply variant code 002: Restamping of voltage. Data for wide range voltage can be taken from page 61-62.
[b)] Motor sizes 80-250: For fixed voltages 230 VΔ and 400 VΔ please apply variant code 002: Restamping of voltage.

Technical data – Increased safety motors

EEx e II T3, Cast iron frame, sizes 80 to 400

IP 55, IC 411; Insulation class F, temperature rise class B - acc. to VIK

Output kW	Type designation	Product code	Speed r/min	Efficiency FL 100%	Power factor cos φ	Current I_N [3] A	Current I_s/I_N	Torque T_N Nm	Torque T_s/T_N	Torque T_{max}/T_N	Time tE sec	Moment of inertia J=1/4 GD² kgm²	Weight kg	Sound pressure level LP dB(A)
3000 r/min = 2 poles			**380...420 V 50 Hz**											
0.75	**M2BA 80 M2 AR**	3GTA 081 310-••A	2820	77.0	0.85	1.8	5.5	2.5	2.3	2.4	25	0.0007	13	58
1.1	**80 M2 BR**	081 320-••A	2820	80.0	0.84	2.4	6.0	3.7	2.9	3.0	13	0.0009	15	58
1.3	**90 S2 BR**	091 120-••A	2860	80.0	0.88	2.7	5.8	4.3	2.6	2.8	16	0.0016	19	61
1.85	**90 L2 BR**	091 520-••A	2880	82.0	0.87	3.8	6.5	6.1	2.7	2.9	11	0.002	21	61
2.5	**100 L2 AR**	101 510-••A	2870	80.0	0.87	5.3	6.4	8.3	2.1	2.3	8	0.0028	31	65
3.3	**112 M2 AR**	111 310-••A	2870	82.0	0.91	6.4	6.0	11	1.7	2.0	11	0.0055	43	68
4.6	**132 S2 AR**	131 110-••A	2900	81.0	0.90	9.5	6.7	15	2.7	2.9	12	0.01	62	73
5.5	**132 S2 BR**	131 120-••A	2920	81.0	0.91	10.7	7.2	18	2.8	3.1	10	0.013	74	73
7.5	**M3HP 160 MLB**	3GHP 161 420-••G	2946	88.6	0.91	14	7.5	24	3.0	3.7	13	0.047	156	76
10	**160 MLC**	161 430-••G	2949	90.3	0.91	18.5	7.6	32	2.9	3.7	12	0.054	167	76
12.5	**160 MLD**	161 440-••G	2942	90.8	0.92	23	7.5	41	2.8	3.4	8	0.059	173	76
15	**180 MLB**	181 420-••G	2952	90.7	0.91	28	7.1	49	2.4	3.3	9	0.092	210	77
20	**200 MLC**	202 430-••G	2961	91.8	0.90	37	7.2	65	2.9	3.9	9	0.21	305	75
24	**200 MLE**	202 450-••G	2962	92.4	0.91	44	7.6	77	2.9	3.9	8	0.22	310	75
28	**225 SMC**	202 230-••G	2963	91.9	0.91	51	7.0	90	2.1	3.1	8	0.34	385	77
36	**250 SMB**	251 220-••G	2969	93.5	0.90	65	6.7	116	1.9	2.7	9	0.66	475	75
3000 r/min = 2 poles			**400 V 50 Hz [1]**											
47	**M2BA 280 SMA**	3GBA 281 210-••A	2982	94.1	0.91	79	7.1	151	1.2	3.0	12	0.8	590	77 (74)[2]
58	**280 SMB**	281 220-••A	2975	94.1	0.91	99	7.0	186	1.2	2.8	10	0.9	630	77 (74)[2]
68	**315 SMA**	311 210-••A	2984	94.8	0.90	117	7.7	218	1.0	3.2	10	1.2	860	80 (74)[2]
80	**315 SMB**	311 220-••A	2983	95.2	0.91	135	7.6	256	1.1	3.2	10	1.4	920	80 (74)[2]
110	**315 SMC**	311 230-••A	2983	95.8	0.92	182	7.7	352	1.1	3.2	8	1.7	1010	80 (74)[2]
125	**315 MLA**	311 410-••A	2983	96.1	0.93	204	7.7	400	1.2	3.1	8	2.1	1170	80 (74)[2]
150	**355 S**	351 100-••A	2981	95.2	0.93	245	6.8	480	1.0	2.7	10	3.8	1550	83 (76)[2]
175	**355 SMA**	351 210-••A	2981	95.5	0.93	285	7.0	560	1.0	2.8	8	4.8	1750	83 (76)[2]
200	**355 MLA**	351 410-••A	2982	95.7	0.93	325	7.4	640	1.0	2.7	10	6	2150	83 (76)[2]
200	**400 M**	401 300-••A	2982	95.7	0.93	325	7.4	640	1.0	2.7	10	6	2200	83 (76)[2]
250	**400 LKA**	401 510-••A	2983	96.0	0.92	410	7.0	800	0.7	3.2	10	7.5	2850	85 (78)[2]

[1] Voltage tolerance ± 5%; voltage range 380...420 V on request.
[2] To reach the lower sound pressure level values an axial fan is used. Please note that the axial fan is a unidirectional fan, direction of rotation to be specified by ordering.
[3] Sizes 80-250: The max. current is indicated at the nominal voltage range 380-420 V.

Technical data for corresponding EEx e T2 VIK available on request.

Notes:
- **Variant code 421 'VIK design' has to be added when ordering**
- **When ordering sizes 160-200 with lifetime lubrication, variant code 195 'Bearings greased for life' has to be added**

Data for other voltages and frequencies, on request.

The two bullets in the product code indicate choice of mounting arrangement (see ordering information), voltage and frequency (below).

Motor	S [a)b)]	D [a)b)]	A [a)]	B [a)]	E	F	G	H	T	U	X
80-250	218..242VΔ 380..420VY	380..420VΔ 655..725VY	380VY50Hz 220VΔ50Hz	380VΔ50Hz 660VY60Hz	500VΔ50 Hz	500VY50Hz	415VY50Hz	415VΔ50Hz	660VΔ50Hz	690VΔ50Hz	Other voltage, coupl. or freq.
280-400	400VY50Hz 230VΔ50Hz	400VΔ50Hz 690VY50Hz	380VY50Hz 220VΔ50Hz	380VΔ50Hz 660VY60Hz	500VΔ50 Hz	500VY50Hz	415VY50Hz	415VΔ50Hz	660VΔ50Hz	690VΔ50Hz	max. 690 V

[a)] Motor sizes 80-250: Only one voltage will be stamped on rating plate.
[b)] Motor sizes 80-250: For fixed voltages 230 VΔ and 400 VΔ please apply variant code 002: Restamping of voltage.

Technical data – Increased safety motors

EEx e II T3, Cast iron frame, sizes 80 to 400

IP 55, IC 411; Insulation class F, temperature rise class B - acc. to VIK

Output kW	Type designation	Product code	Speed r/min	Efficiency FL 100%	Power factor cos φ	Current I_N [2] A	Current I_s/I_N	Torque T_N Nm	Torque T_s/T_N	Torque T_{max}/T_N	Time tE sec	Moment of inertia J=1/4 GD² kgm²	Weight kg	Sound pressure level LP dB(A)
1500 r/min = 4 poles			**380...420 V 50 Hz**											
0.55	**M2BA 80 M4 AR**	3GTA 082 310-••A	1400	71.0	0.75	1.5	4.0	3.7	2.0	2.1	32	0.0011	13	46
0.75	**80 M4 BR**	082 320-••A	1405	75.0	0.74	2	4.3	5.1	2.3	2.4	20	0.0015	15	46
1.0	**90 S4 BR**	092 120-••A	1420	78.0	0.78	2.4	5.0	6.7	2.2	2.4	17	0.0025	18	52
1.35	**90 L4 BR**	092 520-••A	1420	80.0	0.75	3.2	5.7	9.1	2.3	2.7	18	0.0033	21	52
2	**100 L4 AR**	102 510-••A	1430	79.0	0.78	4.8	5.6	13.3	2.2	2.4	12	0.0045	27	53
2.5	**100 L4 BR**	102 520-••A	1435	81.0	0.77	6	6.0	16.6	2.5	2.7	11	0.006	30	53
3.6	**112 M4 AR**	112 310-••A	1440	84.0	0.83	7.7	7.0	24	2.8	3.0	12	0.012	43	56
5	**132 S4 AR**	132 110-••A	1440	86.0	0.84	10	6.2	33	2.6	2.8	10	0.023	62	60
6.8	**132 M4 AR**	132 310-••A	1440	87.0	0.88	13.2	6.0	45	2.3	2.5	10	0.032	74	60
10	**M3HP 160 MLC**	3GHP 162 430-••G	1468	91.0	0.82	20	7.4	65	2.8	3.4	12	0.09	166	65
13.5	**160 MLE**	162 450-••G	1469	91.5	0.83	27	7.7	88	3.0	3.6	8	0.121	189	68
15	**180 MLB**	182 420-••G	1476	92.1	0.82	30	7.0	97	2.6	3.3	13	0.191	214	66
17.5	**180 MLC**	182 430-••G	1477	92.3	0.83	35	7.0	113	2.7	3.2	11	0.239	233	66
24	**200 MLA**	202 410-••G	1480	92.8	0.87	45	7.7	155	2.0	3.2	13	0.3	280	74
30	**225 SMB**	222 220-••G	1484	93.2	0.88	56	7.4	193	1.8	2.6	10	0.45	365	74
36	**225 SMC**	222 230-••G	1480	93.2	0.89	66	7.5	232	1.7	3.0	9	0.53	390	74
44	**250 SMB**	252 220-••G	1483	94.7	0.88	81	7.0	283	1.4	3.2	10	0.98	470	66
1500 r/min = 4 poles			**400 V 50 Hz [1]**											
58	**M2BA 280 SMA**	3GBA 282 210-••A	1484	94.6	0.88	100	7.3	373	1.3	2.9	9	1.25	590	68
70	**280 SMB**	282 220-••A	1484	94.9	0.89	120	7.4	450	1.4	2.9	8	1.5	630	68
84	**315 SMA**	312 210-••A	1489	95.4	0.89	144	7.2	539	1.2	2.9	12	2.3	870	73
100	**315 SMB**	312 220-••A	1489	95.6	0.90	170	7.5	641	1.2	2.9	9	2.6	925	73
115	**315 SMC**	312 230-••A	1488	95.8	0.90	191	7.2	738	1.1	2.7	8	2.9	970	73
135	**315 MLA**	312 410-••A	1489	95.8	0.90	227	7.7	866	1.3	2.8	7	3.5	1080	73
165	**355 S**	352 100-••A	1491	96.0	0.89	280	6.9	1057	1.3	3.0	9	6.5	1550	80
200	**355 SMA**	352 210-••A	1491	96.2	0.89	335	7.0	1281	1.3	3.0	9	8.2	1800	80
250	**355 MLA**	352 410-••A	1490	96.5	0.89	420	7.2	1602	1.4	2.9	8	10	2100	80
250	**400 M**	402 300-••A	1490	96.5	0.89	420	7.2	1602	1.4	2.9	8	10	2150	80
300	**400 LKA**	402 510-••A	1492	96.6	0.91	490	7.3	1920	1.1	3.0	8	12	2900	85

[1] Voltage tolerance ± 5%; voltage range 380...420 V on request.
[2] Sizes 80-250: The max. current is indicated at the nominal voltage range 380-420 V.

Technical data for corresponding EEx e T2 VIK available on request.

Notes:
- **Variant code 421 'VIK design' has to be added when ordering**
- **When ordering sizes 160-200 with lifetime lubrication, variant code 195 'Bearings greased for life' has to be added**

Data for other voltages and frequencies, on request.

The two bullets in the product code indicate choice of mounting arrangement (see ordering information), voltage and frequency (below).

Motor	S [a)b)]	D [a)b)]	A [a)]	B [a)]	E	F	G	H	T	U	X
80-250	218..242VΔ 380..420VY	380..420VΔ 655..725VY	380VY50Hz 220VΔ50Hz	380VΔ50Hz 660VY60Hz	500VΔ50 Hz	500VY50Hz	415VY50Hz	415VΔ50Hz	660VΔ50Hz	690VΔ50Hz	Other voltage, coupl. or freq.
280-400	400VY50Hz 230VΔ50Hz	400VΔ50Hz 690VY50Hz	380VY50Hz 220VΔ50Hz	380VΔ50Hz 660VY60Hz	500VΔ50 Hz	500VY50Hz	415VY50Hz	415VΔ50Hz	660VΔ50Hz	690VΔ50Hz	max. 690 V

[a)] Motor sizes 80-250: Only one voltage will be stamped on rating plate.
[b)] Motor sizes 80-250: For fixed voltages 230 VΔ and 400 VΔ please apply variant code 002: Restamping of voltage.

Technical data – Increased safety motors

EEx e II T3, Cast iron frame, sizes 80 to 400

IP 55, IC 411; Insulation class F, temperature rise class B - acc. to VIK

Output kW	Type designation	Product code	Speed r/min	Efficiency FL 100%	Power factor cos φ	Current I_N [2] A	Current I_s/I_N	Torque T_N Nm	Torque T_s/T_N	Torque T_{max}/T_N	Time tE sec	Moment of inertia J=1/4 GD² kgm²	Weight kg	Sound pressure level LP dB(A)
1000 r/min = 6 poles			**380...420 V 50 Hz**											
0.37	**M2BA 80 M6 AR**	3GTA 083 310-••A	975	73.0	0.68	1.1	3.9	3.8	2.3	2.2	63	0.0023	10	48
0.55	**80 M6 BR**	083 320-••A	975	72.0	0.71	1.6	3.8	6.8	2.2	2.1	46	0.0029	11	48
0.7	**90 S6 BR**	093 120-••A	930	74.0	0.72	1.9	3.9	7.1	2.0	2.0	38	0.004	16	48
0.95	**90 L6 BR**	093 520-••A	930	76.0	0.69	2.7	4.3	8.7	2.4	2.2	26	0.0065	18	48
1.3	**100 L6 BR**	103 520-••A	955	79.0	0.72	3.2	5.5	13	2.5	2.3	25	0.01	22	51
1.9	**112 M6 AR**	113 310-••A	955	84.0	0.76	4.3	6.2	16.8	2.4	2.4	24	0.01	34	54
2.6	**132 S6 AR**	133 110-••A	965	84.0	0.77	5.7	6.8	25.7	2.4	2.7	20	0.032	48	59
3.5	**132 M6 AR**	133 310-••A	960	86.0	0.81	7.4	6.1	34.8	2.2	2.6	18	0.038	56	59
6.6	**M3HP 160 MLA**	3GHP 163 410-••G	972	88.9	0.77	14.2	7.1	65	2.1	3.4	15	0.088	160	64
9.7	**160 MLC**	163 430-••G	972	89.1	0.77	20.5	7.5	95	2.4	3.7	13	0.127	173	64
13.2	**180 MLB**	183 420-••G	973	90.7	0.78	28	6.7	130	1.7	3.0	10	0.221	233	67
16.5	**200 MLB**	203 420-••G	984	91.5	0.83	33	7.1	160	3.2	3.3	15	0.47	290	70
20	**200 MLC**	203 430-••G	983	91.6	0.84	39	7.0	194	3.0	2.7	9	0.52	305	70
27	**225 SMC**	223 230-••G	987	93.1	0.82	53	7.8	261	3.2	3.4	12	0.78	380	64
33	**250 SMB**	253 220-••G	989	93.6	0.86	63	7.3	319	2.7	2.9	10	1.6	465	64
1000 r/min = 6 poles			**400 V 50 Hz [1]**											
40	**M2BA 280 SMA**	3GBA 283 210-••A	987	94.2	0.89	80	7.5	445	1.4	2.8	18	2.2	610	66
46	**280 SMB**	283 220-••A	993	94.6	0.86	116	7.7	616	1.4	2.8	17	3.2	820	72
64	**315 SMA**	313 210-••A	993	94.9	0.87	133	7.6	731	1.4	2.6	10	4.1	910	72
76	**315 SMB**	313 220-••A	992	95.3	0.85	165	7.7	886	1.6	2.9	8	4.9	980	72
92	**315 SMC**	313 230-••A	992	95.5	0.85	195	7.7	1059	1.7	2.7	8	5.8	1100	72
110	**315 MLA**	313 410-••A	994	95.5	0.84	240	6.9	1268	1.4	2.8	7	10.4	1550	75
132	**355 S**	353 100-••A	994	95.5	0.84	240	6.9	1268	1.4	2.8	9	10.4	1550	75
160	**355 SMA**	353 210-••A	994	95.8	0.84	290	7.4	1537	1.5	2.9	10	12.5	1800	75
200	**355 MLA**	353 410-••A	994	96.0	0.84	360	7.5	1921	1.5	2.9	8	14.6	2100	75
200	**400 MA**	403 310-••A	994	96.0	0.84	360	7.5	1921	1.5	2.9	8	14.6	2150	75
250	**400 LKA**	403 510-••A	994	96.2	0.85	440	7.0	2402	1.3	3.0	8	16.5	2800	80
300	**400 LKB**	403 520-••A	994	96.4	0.86	520	7.0	2882	1.4	3.0	8	19	3050	80

[1] Voltage tolerance ± 5%; voltage range 380...420 V on request.
[2] Sizes 80-250: The max. current is indicated at the nominal voltage range 380-420 V.

Technical data for corresponding EEx e T2 VIK available on request.

Notes:
- **Variant code 421 'VIK design' has to be added when ordering**
- **When ordering sizes 160-200 with lifetime lubrication, variant code 195 'Bearings greased for life' has to be added**

Data for other voltages and frequencies, on request.

Technical data – Increased safety motors

EEx e II T3, Cast iron frame, sizes 80 to 400

IP 55, IC 411; Insulation class F, temperature rise class B - acc. to VIK

Output kW	Type designation	Product code	Speed r/min	Efficiency FL 100%	Power factor cos φ	Current I_N A	Current $\frac{I_s}{I_N}$	Torque T_N Nm	Torque $\frac{T_s}{T_N}$	Torque $\frac{T_{max}}{T_N}$	Time tE sec	Moment of inertia J=1/4 GD² kgm²	Weight kg	Sound pressure level LP dB(A)
750 r/min = 8 poles			**380...420 V 50 Hz**											
0.25	**M2BA 80 M8 AR**	3GTA 084 310-••A	685	62.0	0.64	0.71	2.7	3.5	2.00	2.20	90	0.002	9.5	44
0.37	**80 M8 BR**	084 320-••A	690	62.0	0.57	1.5	3.1	5.1	2.70	2.90	90	0.0026	11	44
0.55	**90 L8 AR**	094 510-••A	680	63.0	0.68	1.7	3.1	7.7	1.80	2.00	90	0.0055	17	47
0.65	**100 L8 AR**	104 510-••A	705	70.0	0.64	2.1	3.6	8.8	2.00	2.20	35	0.008	22	54
0.95	**100 L8 BR**	104 520-••A	705	73.0	0.65	2.9	3.8	12.7	2.00	2.20	26	0.0105	26	54
1.3	**112 M8 AR**	114 310-••A	715	79.0	0.68	3.7	4.7	17.4	2.50	2.80	34	0.018	45	54
1.9	**132 S8 AR**	134 110-••A	705	80.0	0.78	4.4	4.3	25.7	1.80	2.00	35	0.03	64	54
2.6	**132 M8 AR**	134 310-••A	710	83.0	0.78	6.1	4.8	35	2.20	2.40	32	0.04	77	52
3.5	**M3HP 160 MLA**	3GHP 164 410-••G	719	83.1	0.69	9.1	5.0	46	1.8	2.9	20	0.071	146	59
4.8	**160 MLB**	164 420-••G	716	83.4	0.70	12.1	5.0	64	1.8	2.7	18	0.09	160	59
6.6	**160 MLC**	164 430-••G	716	85.7	0.70	16.7	5.5	88	1.8	3.0	16	0.121	188	59
9.7	**180 MLB**	184 420-••G	727	90.1	0.74	22	5.7	127	1.7	2.8	14	0.239	227	63
13.2	**200 MLB**	204 420-••G	734	90.4	0.82	27	6.0	172	1.8	3.0	23	0.54	300	64
16.5	**225 SMB**	224 220-••G	736	91.1	0.79	34	6.6	214	2.0	3.0	25	0.68	350	65
20	**225 SMC**	224 230-••G	735	91.4	0.80	41	6.7	260	2.1	3.3	25	0.75	375	65
27	**250 SMA**	254 210-••G	736	91.9	0.82	54	6.3	350	1.9	2.8	16	1.25	420	65
750 r/min = 8 poles			**400 V 50 Hz [1)]**											
33	**M2BA 280 SMA**	3GBA 284 210-••A	740	93.2	0.80	64	6.9	426	1.7	2.8	17	1.85	570	65
40	**280 SMB**	284 220-••A	739	93.7	0.81	78	6.8	517	1.6	2.8	18	2.2	610	65
50	**315 SMA**	314 210-••A	744	94.3	0.79	98	6.7	642	1.3	2.4	15	3.2	820	70
68	**315 SMB**	314 220-••A	744	94.9	0.79	132	7.0	873	1.4	2.4	10	4.1	910	70
80	**315 SMC**	314 230-••A	744	95.1	0.80	154	7.2	1027	1.5	2.5	10	4.9	980	70
95	**315 MLA**	314 410-••A	743	95.3	0.80	182	7.0	1221	1.5	2.4	7	5.8	1100	70
110	**355 S**	354 100-••A	745	95.0	0.79	210	6.7	1410	1.5	2.4	10	10.4	1550	75
132	**355 SMA**	354 210-••A	744	95.4	0.79	255	7.1	1694	1.6	2.4	8	12.5	1800	75
160	**355 MLA**	354 410-••A	745	95.6	0.75	320	7.2	2051	1.6	2.7	8	14.6	2100	75
160	**400 M**	404 300-••A	745	95.6	0.75	320	7.2	2051	1.6	2.7	8	14.6	2150	75
200	**400 LKA**	404 510-••A	746	96.0	0.78	385	7.2	2560	1.6	3.0	8	16.5	2800	80
250	**400 LKB**	404 520-••A	746	96.2	0.79	475	6.7	3200	1.5	2.9	9	19	3050	80

[1)] Voltage tolerance ± 5%; voltage range 380...420 V on request.
[2)] Sizes 80-250: The max. current is indicated at the nominal voltage range 380-420 V.

Technical data for corresponding EEx e T2 VIK available on request.

Notes:
- **Variant code 421 'VIK design' has to be added when ordering**
- **When ordering sizes 160-200 with lifetime lubrication, variant code 195 'Bearings greased for life' has to be added**

Data for other voltages and frequencies, on request.

The two bullets in the product code indicate choice of mounting arrangement (see ordering information), voltage and frequency (below).

Motor	S [a)b)]	D [a)b)]	A [a)]	B [a)]	E	F	G	H	T	U	X
80-250	218..242VΔ 380..420VY	380..420VΔ 655..725VY	380VY50Hz 220VΔ50Hz	380VΔ50Hz 660VY60Hz	500VΔ50 Hz	500VY50Hz	415VY50Hz	415VΔ50Hz	660VΔ50Hz	690VΔ50Hz	Other voltage, coupl. or freq.
280-400	400VY50Hz 230VΔ50Hz	400VΔ50Hz 690VY50Hz	380VY50Hz 220VΔ50Hz	380VΔ50Hz 660VY60Hz	500VΔ50 Hz	500VY50Hz	415VY50Hz	415VΔ50Hz	660VΔ50Hz	690VΔ50Hz	max. 690 V

[a)] Motor sizes 80-250: Only one voltage will be stamped on rating plate.
[b)] Motor sizes 80-250: For fixed voltages 230 VΔ and 400 VΔ please apply variant code 002: Restamping of voltage.

Rating plates

For motor sizes 63 to 132 the rating plate gives one current value for the voltage area. That is the highest current that can occur within the voltage area with the given output.

For motor sizes 160 to 400 the rating plate is in table form giving values for speed, current and power factor for six voltages.

European standards require a special marking on safety motors. The marking shall include the following:
- type of protection
- apparatus group
- temperature class
- name of certifying body
- certificate number

For increased safety motors, marking shall also include:
- I_A/I_N
- t_E

M2AA 63-100

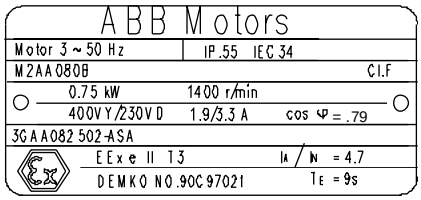

M2AA 112-132

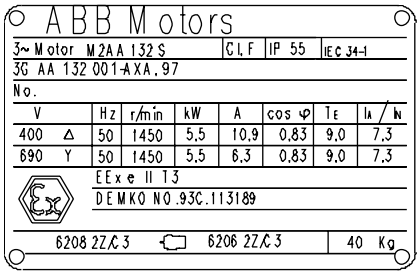

M2AA 160-250

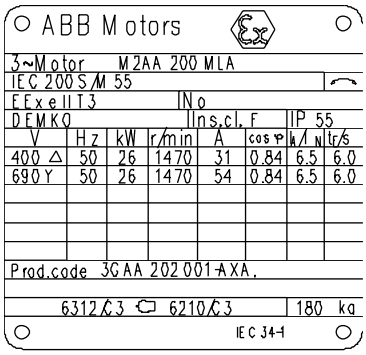

M2BA 80-132

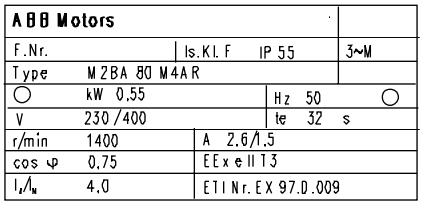

M3HP 160-250

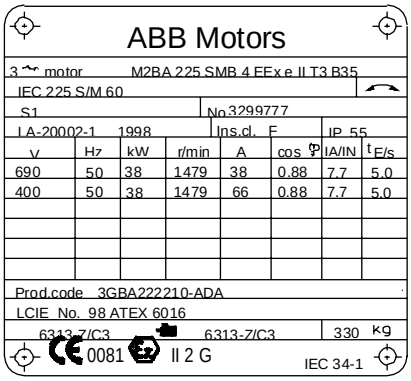

M2BA 280-400

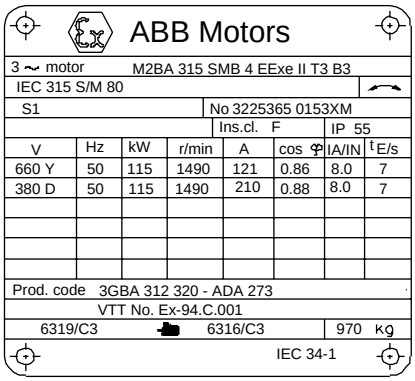

Variant codes - Increased safety motors

Variant codes / Increased safety motors		Aluminium motors				Cast iron motors			
Code [1]	Variant	63-100	112-132	160-180	200-250	80-132	160-250	280-315	355-400
Balancing									
052	Balancing to grade R (ISO 2373).	T	T	T	T	T	T	T	T
417	Balancing to grade S (ISO 2373).	–	T	T	R	T	T	T	T
424	Full key balancing.	T	T	T	T	T	T	T	T
Bearings and lubrication									
037	Roller bearing at D-end.	–	–	R	R	–	T	L	L
039	Cold resistant grease (-55...+100°C).	L	R	R	R	–	L	L	L
040	Heat resistant grease (-25...+150°C). Aluminium motors sizes 63-100: -40...+160°C.	S	R	R	R	–	S	S	S
041	Bearings regreasable via grease nipples.	–	R	R	S	T	S	S	S
194	2Z-bearings at both ends. Cast iron motor sizes 160-250 available as stocked option with lifetime bearings.	S	S	S	R	S	T	R	–
195	Bearings greased for life. Cast iron motor sizes 160-250 available as stocked option with lifetime bearings.	S	S	S	R	S	T	R	–
042	Internal bearing cover, locked D-end. Standard for M2AA 90-100 and flange-mounted M2AA 112-132, M2BA 160-180.	L	L	S	L	R	S	S	S
043	SPM-nipples.	–	L	L	L	T	S	L	S
058	Angular contact bearing at D-end, shaft force away from bearing.	–	R	R	–	–	T	L	L
059	Angular contact bearing at N-end, shaft force towards bearing.	–	R	R	R	–	R	–	–
107	Bearing mounted PT100 resistance elements.	–	–	–	–	–	T	T	T
188	63-series bearings at D-end. Aluminium motors sizes 90-100 = S	–	R	R	S	–	S	S	S
433	Grease relief.	–	–	–	–	R	R	–	–
Branch standard designs									
178	Stainless steel/acid proof bolts.	L	L	L	L	R	T	T	T
411	Increased efficiency design.	–	–	–	–	R	R	T	T
415	Smoke venting design (short time duty in high ambient temp.).	–	R	R	R	–	–	–	–
170	Smoke venting specification 200°C, 2 hours.	–	R	R	R	–	–	–	–
171	Smoke venting specification 300°C, 0.5 hours.	–	R	R	R	–	–	–	–
172	Smoke venting specification 300°C, 1 hour.	–	R	R	R	–	–	–	–
425	Corrosion protected stator and rotor core.	R	–	–	–	–	–	T	T
432	Copper bar rotor.	–	–	–	–	–	–	T	T
Cooling system									
053	Metal fan cover.	L	S	S	S	S	S	S	S
068	Metal fan.	–	L	L	L	T	T	L	L
490	Plastic fan with metal hub.	–	–	–	–	–	–	L	S
075	Cooling method IC 418 (without fan).	–	R	R	R	R	R	T	T
183	Separate motor cooling (fan axial, N-end).	–	R	R	R	–	R	T	T
422	Separate motor cooling (fan top or side, N-end).	–	–	–	–	–	–	T	T
791	Stainless steel fan cover.	–	–	–	–	–	R	R	R
Coupling									
035	Assembly of customer supplied coupling-half.	–	–	–	–	R	R	L	L
Drain holes									
065	Plugged drain holes.	–	S	S	S	T	L	L	L
066	Modified drain hole position (for specified IM xxxx).	L	–	–	–	T	L	L	L
076	Draining holes with plugs.	L	–	–	–	T	S	S	S

[1] = Certain variant codes cannot be used together
R = On request
S = Included as standard
L = Modification of stocked motor or during new production
T = With new production only

Variant codes / Increased safety motors		Aluminium motors				Cast iron motors			
Code [1]	Variant	63-100	112-132	160-180	200-250	80-132	160-250	280-315	355-400
Earthing bolt									
067	External earthing bolt.	S	S	S	S	S	S	S	S
Hazardous environments									
097	EEx e design.	S	L	R	T	–	–	–	–
458	EEx e design, fulfilling EN 50014 and EN 50019.	–	–	–	–	S	S	S	S
272	EEx e design, temperature class T2.	S	R	R	R	T	T	T	T
273	EEx e design, temperature class T3.	S	R	R	R	T	T	T	T
274	EEx e design, temperature class T4.	S	R	R	R	–	–	–	–
275	EEx e design, temperature class T5.	S	R	R	R	–	–	–	–
276	EEx e design, temperature class T6.	S	R	R	R	–	–	–	–
452	DIP according to EN 50 281-1-1, T = 125°C, category 3 D, IP 55 (according to zone 22)	–	–	–	–	R	R	R	R
453	DIP according to EN 50 281-1-1, T = 125°C, category 2 D, IP 65 (for zone 21)	–	–	–	–	R	R	R	R
Heating elements									
450	Heating element, 110-120 V.	–	R	R	R	T	T	T	T
451	Heating element, 220-240 V.	–	R	R	R	T	T	L	L
Insulation system									
014	Winding insulation class H.	–	R	R	R	–	–	T	T
406	Winding for supply > 690 ≤ 1000 Volts.	–	–	–	R	–	–	R	R
Marine motors									
	See catalogue 'Marine Motors, BA/Marine GB', for details.								
Mounting arrangements									
008	IM 2101 foot/flange mounted, IEC flange, from IM 1001 (B34 from B3).	L	L	–	–	T	–	–	–
009	IM 2001 foot/flange mounted, IEC flange, from IM 1001 (B35 from B3).	L	L	L	L	T	L	L	L
047	IM 3601 flange mounted, IEC flange, from IM 3001 (B14 from B5), flange mounted with large flange. Small flange with tapped holes.	L	L	–	–	T	–	–	–
048	IM 3001 flange mounted, IEC flange, from IM 3601 (B5 from B14), flange mounted with small flange. Large flange with clearance holes.	L	–	–	–	–	–	–	–
078	(IM 3601) flange mounted, DIN C-flange. Small flange with tapped holes. Larger flange than standard version.	L	–	–	–	–	–	–	–
080	(IM 3001) flange mounted, DIN A-flange. Large flange with clearance holes. Larger flange than standard version.	L	–	–	–	–	–	–	–
090	(IM 2101) foot/flange mounted, DIN C-flange, from IM 1001 (B34 from B3). Small flange with tapped holes. Larger flange than standard version.	L	–	–	–	–	–	–	–
091	(IM 2001) foot/flange mounted, DIN A-flange, from IM 1001 (B35 from B3). Large flange with clearance holes. Larger flange than standard version.	L	–	–	–	–	–	–	–
Painting									
114	Special paint colour, standard grade.	L	L	L	L	L	L	L	L
115	Offshore, zinc primer painting.	R	R	R	R	R	T	T	T
179	Special paint specification.	R	R	R	R	R	R	R	R

[1] = Certain variant codes cannot be used together
R = On request
S = Included as standard
L = Modification of stocked motor or during new production
T = With new production only

Variant codes / Increased safety motors		Aluminium motors				Cast iron motors			
Code [1]	Variant	63-100	112-132	160-180	200-250	80-132	160-250	280-315	355-400
Protection									
072	Radial seal at D-end.	–	R	R	R	T	L	L	L
073	Sealed against oil at D-end.	T	–	–	–	R	T	T	T
005	Protective roof, vertical motor, shaft down.	L	S	S	S	S	S	S	S
401	Protective roof, horizontal motor.	–	–	–	–	R	T	T	T
403	Degree of protection IP 56.	–	R	R	R	R	T	L	L
404	Degree of protection IP 56, without fan.	–	–	–	–	–	R	T	T
783	Labyrinth sealing at D-end.	–	–	–	–	R	T	T	T
Rating & instruction plates									
002	Restamping voltage, frequency and output, continuous duty.	L	–	–	–	–	–	L	L
013	Restamping to output for class F temperature rise.	–	–	–	–	–	–	L	L
095	Restamping output (maintained voltage, frequency), intermittent duty.	–	–	–	–	–	–	L	L
138	Mounting of additional identification plate.	L	L	L	L	R	L	L	L
150	Instruction plates and maintenance instructions in non-standard language.	R	R	R	R	R	R	R	R
161	Additional rating plate delivered loose.	L	R	R	R	T	L	L	L
Shaft & rotor									
069	Two shaft extensions as per basic catalogue.	T	T	T	T	T	T	T	T
070	One or two special shaft extensions, standard shaft material.	T	T	T	T	R	T	T	T
155	Cylindrical shaft extension, D-end, without key-way.	T	–	–	–	R	T	T	T
156	Cylindrical shaft extension, N-end, without key-way.	T	–	–	–	R	T	T	T
166	One special shaft extension, standard shaft material, configured according to eCommerce rules.					–	–	–	–
410	Stainless/acid-proof steel shaft (standard or non-standard).	T	R	R	R	R	T	T	T
Standards and regulations									
152	Classified shaft material.	–	–	–	–	T	T	T	T
153	Reduced test for classification society.	–	–	–	–	T	R	L	L
421	VIK design (Verband der industriellen Energie- und Kraftwirtshaft e.V).	–	–	–	–	T	T	T	T
773	EEMUA No 132 1988 design.	–	–	–	–	R	R	T	T
774	NORSOK (North SeaTerritorial Waters) design.	–	–	–	–	R	R	T	T
775	SHELL DEP 33.66.05.31-Gen. January 1999 design.	–	–	–	–	R	R	T	T
Stator winding temperature sensors									
435	PTC - thermistors (3 in series), 130°C, in stator winding. Aluminium motors: only T3 motors.	T	R	R	R	T	T	L	L
436	PTC - thermistors (3 in series), 150°C, in stator winding.	–	R	R	S	T	S	S	S
439	PTC - thermistors (2x3 in series), 150°C, in stator winding.	–	R	R	R	T	T	L	L
441	PTC - thermistors (3 in series 130°C & 3 in series 150°C) in stator winding.	–	R	R	R	T	T	L	L
442	PTC - thermistors (3 in series 150°C & 3 in series 170°C) in stator winding.	–	R	R	R	–	–	L	L
445	PT100 resistance element (1 per phase) stator winding.	–	R	R	R	R	R	L	L
445	PT100 resistance element (2 per phase) stator winding.	–	R	R	R	R	R	L	L

[1] = Certain variant codes cannot be used together
R = On request
S = Included as standard
L = Modification of stocked motor or during new production
T = With new production only

Variant codes / Increased safety motors		Aluminium motors				Cast iron motors			
Code [1]	Variant	63-100	112-132	160-180	200-250	80-132	160-250	280-315	355-400
Terminal box									
015	Δ connection in terminal box (reconnection from Y).	L	L	L	L	T	L	L	L
017	Y connection in terminal box (reconnection from Δ).	L	L	L	L	T	L	L	L
157	Terminal box degree of protection IP 65.	–	–	–	–	R	L	L	L
230	Standard cable glands.	–	–	–	–	T	S	S	S
231	Standard cable glands with clamping device.	–	–	–	–	R	L	L	L
400	4 x 90 degr turnable terminal box. Cast iron sizes 200-250 = S	–	–	–	–	–	T	T	T
402	Terminal box adapted for Al cables.	–	–	–	R	–	R	S	S
413	Extended cable connection, no terminal box.	–	–	–	–	–	–	T	T
414	Smaller than standard terminal box.	–	–	–	–	–	–	R	R
418	Separate terminal box for temperature detectors.	–	R	R	R	–	T	L	L
466	Terminal box at N-end.	–	–	–	–	–	R	R	R
467	Lower than standard terminal box and rubber extended cable.	–	–	–	–	–	–	R	R
468	Non-standard cable entry direction (state cable direction)	–	–	–	–	T	T	T	T
469	Axial cable entry direction.	–	–	–	–	T	T	T	T
731	Non-standard cable glands.	–	–	–	–	R	R	L	L
736	Standard cable gland EEx e II, fulfilling EN 50014 and 50019.	–	–	–	–	T	T	T	T
737	Standard cable gland EEx e II with clamping device, fulfilling EN 50014 and 50019.	–	–	–	–	T	T	T	T
Testing									
145	Type test report from test of identical motor.	R	L	L	L	L	L	L	L
146	Type test with report for motor from specific delivery batch.	T	L	L	L	T	L	L	L
147	Type test with report for motor from specific delivery batch, customer witnessed.	T	L	L	L	T	L	L	L
148	Routine test report.	R	L	L	L	T	L	L	L
149	Testing according to separate test specification.	R	L	L	L	T	L	L	L
760	Vibration level test.	R	R	R	R	T	L	L	L
761	Vibration spectrum test.	R	R	R	R	–	L	L	L
762	Noise level test.	R	R	R	R	T	L	L	L
763	Noise spectrum test.	R	R	R	R	T	L	L	L
764	Complete test with ABB frequency converter.	R	R	R	R	R	R	L	L
768	Chog type test with report for motor from specific delivery batch.	–	–	–	–	R	T	R	R
769	Chog type test report from test of identical motor.	–	–	–	–	R	T	R	R
Y/Δ-starting									
117	Terminals for Y/Δ start at both speeds (two-speed windings).	–	–	–	–	–	–	T	T
118	Terminals for Y/Δ start at high speed (two-speed windings).	–	–	–	–	–	–	T	T
119	Terminals for Y/Δ start at low speed (two-speed windings).	–	–	–	–	–	–	T	T

[1] = Certain variant codes cannot be used together
R = On request
S = Included as standard
L = Modification of stocked motor or during new production
T = With new production only

Dimension drawings

M3000 Increased safety motors, aluminium frame

Foot-mounted motor IM 1001, IM B3

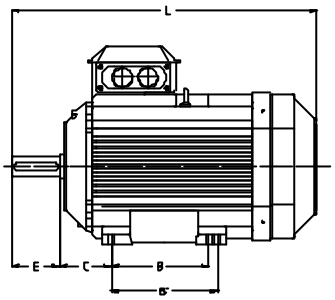

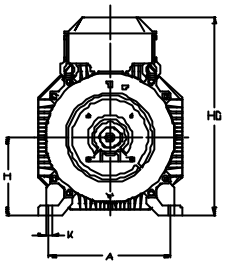

Flange-mounted motor IM 3001, IM B5

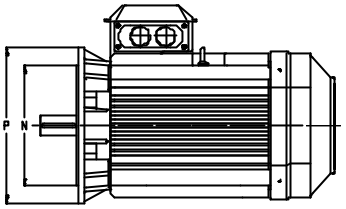

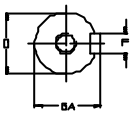

Shaft extension

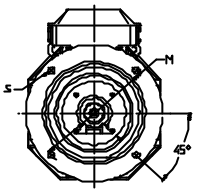

Sizes 63-200

Flanges

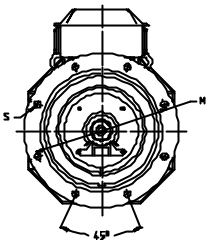

Sizes 225-250

	IM 1001, IM B3 AND IM 3001, IM B5										IM 1001, IM B3							IM 3001, IM B5			
Motor size	D poles 2	D poles 4-8	GA poles 2	GA poles 4-8	F poles 2	F poles 4-8	E poles 2	E poles 4-8	L max poles 2	L max poles 4-8	A	B	B'	C	HD	K	H	M	N	P	S
63	14	14	16	16	5	5	30	30	213	213	100	80	–	40	150	7	63	130	110	160	10
71	14	14	16	16	5	5	30	30	239	239	112	90	–	45	172	7	71	130	110	160	10
80	19	19	21.5	21.5	6	6	40	40	272	272	125	100	–	50	192	10	80	165	130	200	12
90 S	24	24	27	27	8	8	50	50	295	295	140	100	–	56	212	10	90	165	130	200	12
90 L	24	24	27	27	8	8	50	50	320	320	140	125	–	56	212	10	90	165	130	200	12
100 L	28	28	31	31	8	8	60	60	358.5	358.5	160	140	–	63	236	12	100	215	180	250	15
112 M	28	28	31	8	8	8	60	60	361	361	190	140	–	70	258	12	112	215	180	250	14.5
132	38	41	41	41	10	10	80	80	447	447	216	140	178	89	295.5	12	132	265	230	300	14.5
160 M	42	42	45	45	12	12	110	110	602.5	602.5	254	210	254	108	368.5	15	160	300	250	350	19
160 L	42	42	45	45	12	12	110	110	643.5	643.5	254	210	254	108	368.5	15	160	300	250	350	19
180 M	48	51.5	51.5	51.5	14	14	110	110	680	680	279	241	279	121	403.5	15	180	300	250	350	19
180 L	48	51.5	51.5	51.5	14	14	110	110	700.5	700.5	279	241	279	121	403.5	15	180	300	250	350	19
200 ML	55	55	59	59	16	16	110	110	773	773	318	267	305	133	496.5	18	200	350	300	400	19
225 SM	55	60	59	64	16	18	110	110	835	865	356	286	311	149	542	18	225	400	350	450	19
250 SM	60	65	64	69	18	18	140	140	872	872	406	311	349	168	590	22	250	500	450	550	19

IM 3601, IM B14

Motor size	HB	LA	M	P	S	T
63	258	120	100	80	M8	S
71	260	140	115	95	M8	R
80	229	160	130	110	M8	R
90	236	200	165	130	M10	N
100	246	250	215	180	M12	N
112	256	300	265	230	M12	N

Tolerances:

A, B	± 0,8
D, DA	ISO k6 < Ø 50mm
	ISO m6 > Ø 50mm
F, FA	ISO h9
H	+0 -0.5
N	ISO j6
C, CA	± 0.8

Above table gives the main dimensions in mm.

For detailed drawings please our web-pages 'www.abb.com/motors&drives' or contact ABB Motors.

Dimension drawings

M3000 Increased safety motors, cast iron frame

Foot-mounted motor IM 1001, IM B3

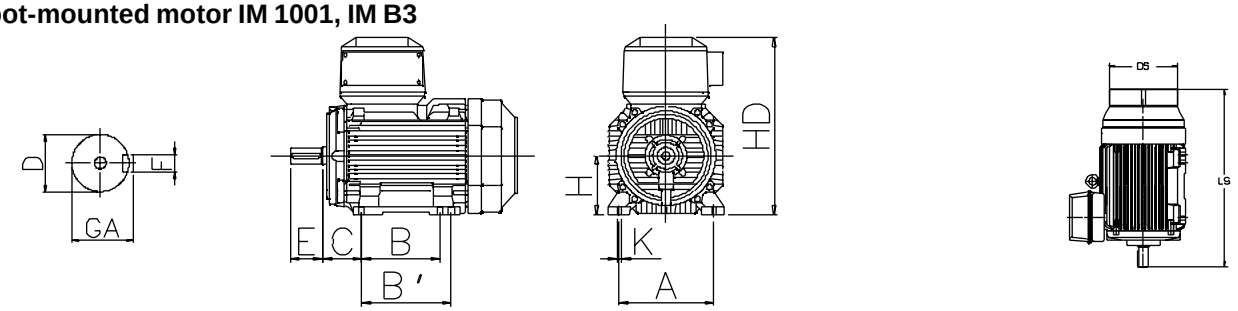

Flange-mounted motor IM 3001, IM B5

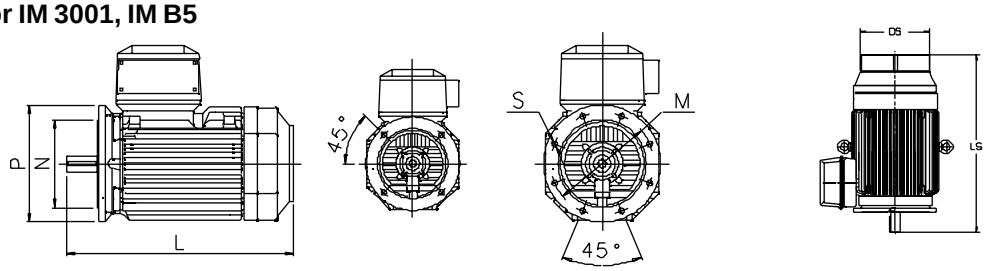

Sizes 80-200

Sizes 225-400

Protective roof, variant code 005

	IM 1001, IM B3 AND IM 3001, IM B5										IM 1001, IM B3							IM 3001, IM B5				Protective roof		
Motor size	D poles 2	4-8	GA poles 2	4-8	F poles 2	4-8	E poles 2	4-8	L max poles 2	4-8	A	B	B'	C	HD	K	H	M	N	P	S	DS	LS poles 2	4-8
80	19	19	21.5	21.5	6	6	40	40	273	273	125	100	–	50	221	9.5	80	165	130	200	11	150	306	306
90 S	24	24	27	27	8	8	50	50	301	301	140	100	–	56	240	9.5	90	165	130	200	11	170	360	360
90 L	24	24	27	27	8	8	50	50	326	326	140	125	–	56	240	9.5	90	165	130	200	11	170	360	360
100	28	28	31	31	8	8	60	60	378	378	160	140	–	63	260	11	100	215	180	250	13	188	425	425
112	28	28	31	31	8	8	60	60	414	414	190	140	–	70	281	11	112	215	180	250	13	188	444	444
132 S	38	38	41	41	10	10	80	80	454	454	216	140	–	89	344	11	132	265	230	300	14	255	548	548
132 M	38	38	41	41	10	10	80	80	492	492	216	178	–	89	344	11	132	265	230	300	14	255	548	548
160	42	42	45	45	12	12	110	110	711	711	254	210	254	108	388	14.5	160	300	250	350	18.5	328	756	756
180	48	48	51.5	51.5	14	14	110	110	706	706	279	241	279	121	426	14.5	180	300	250	350	18.5	359	756	756
200	55	55	59	59	16	16	110	110	774	774	318	267	305	133	536	18.5	200	350	300	400	18.5	414	844	844
225	55	60	59	64	16	18	110	140	841	871	356	286	311	149	583	18.5	225	400	350	450	18.5	462	921	951
250	60	65	64	69	18	18	140	140	875	875	406	311	349	168	646	24	250	500	450	550	18.5	506	965	965
280	65	75	69	79.5	18	20	140	140	1088	1088	457	368	419	190	745	24	280	500	450	550	18	460	1190	1190
315 SM	65	80	69	85	18	22	140	170	1173	1203	508	406	457	216	840	30	315	600	550	660	23	520	1290	1320
315 ML	65	90	69	95	18	25	140	170	1224	1254	508	457	508	§1216	840	30	315	600	550	660	23	520	1345	1375
355 S	70	100	74.5	106	20	28	140	210	1344	1414	610	500	–	254	955	35	355	740	680	800	23	590	1480	1550
355 SM	70	100	74.5	106	20	28	140	210	1396	1466	610	500	560	254	955	35	355	740	680	800	23	590	1530	1600
355 ML	70	100	74.5	106	20	28	140	210	1501	1571	610	560	630	254	955	35	355	740	680	800	23	590	1635	1705
400 M	70	100	74.5	106	20	28	140	210	1501	1571	686	630	–	280	1005	35	400	–	–	–	–	590	1635	1705
400 LK	80	100	85.0	106	22	28	170	210	1708	1748	686	710	800	280	1040	35	400	740	680	800	23	700	1860	1900

IM 3601, IM B14

Motor size	HB	LA	M	P	S	T
63	258	120	100	80	M8	S
71	260	140	115	95	M8	R
80	229	160	130	110	M8	R
90	236	200	165	130	M10	N
100	246	250	215	180	M12	N
112	256	300	265	230	M12	N

Tolerances:

A, B	± 0,8
D, DA	ISO k6 < Ø 50mm
	ISO m6 > Ø 50mm
F, FA	ISO h9
H	+0 -0.5
N	ISO j6
C, CA	± 0.8

Above table gives the main dimensions in mm.

For detailed drawings please our web-pages 'www.abb.com/motors&drives' or contact ABB Motors.

Dimension drawings

Increased safety motors, cast iron frame

Terminal boxes, standard design with 6 terminals

Motor sizes 80 - 132 [1)]

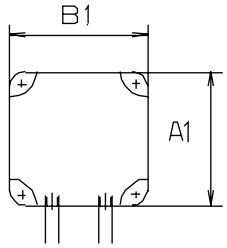

Motor sizes 160 - 250

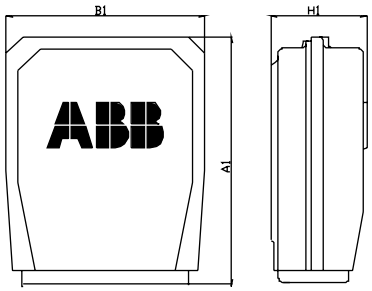

Motor sizes 280 - 400:

Top-mounted terminal box:

122/2
142/1, 142/2

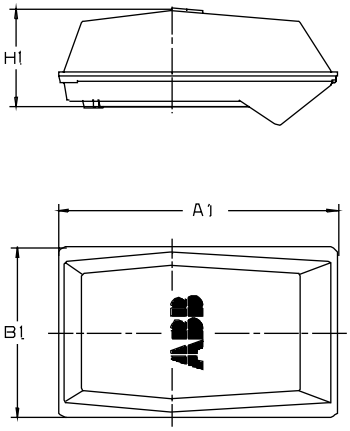

162/1, 162/2 +
adaptor MPMM-ZL1

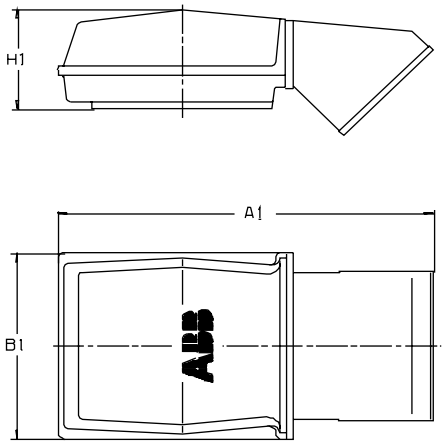

Side-mounted terminal box [1)]:

122/7
142/5, 142/10
162/5, 162/8

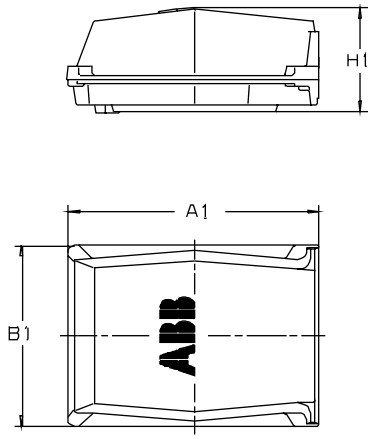

Motor size	A1	B1	H1
80 - 112	131	118	55
132	170	170	80
160 - 180	234	234	51.5
200 - 250	350	319	147

Motor size	Terminal box type	A1	B1	H1
Top-mounted terminal box:				
280	122/2	455	280	177
315 - 400M	142/1, 142/2	536	349	197
355 - 400	162/1, 162/2 + Adapter MPMM-ZL1	787	410	226
Side-mounted terminal box:				
280	122/7	383	280	180
315 - 400M	142/5, 142/10	426	347	201
355 - 400	162/5, 162/8	508	412	226

[1)] The design complies with VIK design.

For motor dimensions please see dimension drawings on earlier pages.

Notes:

Increased safety motors with aluminium frame in brief, basic design

Motor size		63	71	80	90	100
Stator	Material Surface treatment	Die-cast aluminium alloy. Feet integrated with stator. One-component modified polyester paint. Munsell blue 8B 4.5/3.25 / NCS 4822-B05G. ≥ 30 µm.				
Feet	Material	Aluminium alloy. Integrated with the stator.				
Bearing end shields	Material Surface treatment	Diecast aluminium alloy. One-component modified polyester paint. Munsell blue 8B 4.5/3.25 / NCS 4822-B05G. ≥ 30 µm.				
Bearings **Single-speed motors**	D-end N-end	6202-2Z/C3 6202-2Z/C3	6203-2Z/C3 6202-2Z/C3	6204-2Z/C3 6203-2Z/C3	6305-2Z/C3 6204-2Z/C3	6306-2Z/C3 6205-2Z/C3
Axially-locked bearings	Inner bearing cover	[1]	[1]	[1]	D-end	D-end
		[1] Foot-mounted motor. A spring washer at N-end presses the rotor against D-end.				
Bearing seal	D-end N-end	V-ring. Labyrinth seal.				
Lubrication		Permanently lubricated bearings. Grease for bearing temperatures -40 to +160°C.				
Terminal box	Material Surface treatment Screws	Die-cast aluminium alloy. Similar to stator. Steel 5G. Galvanised and yellow chromated.				
Connections	Knock-out openings	4 x M16 4 x Pg 11	4 x M20 4 x Pg 16			
	Terminal box Max Cu-area, mm²	Screw terminal. 6 terminals. 2.5				
Fan	Material	Polypropylene. Reinforced with 20% glass fibre.				
Fan cover	Material	Polypropylene.				
Stator winding	Material Impregnation Insulation class Winding protection	Copper Polyester vanish. Tropicalised. Insulation class F. Temperature rise class B, unless otherwise stated. On request, see variant codes.				
Rotor winding	Material	Die-cast aluminium.				
Balancing method		Half key balancing.				
Key ways		Closed key way				
Enclosure		IP 55				
Cooling method		IC 411				
Drain holes		As standard without drawing holes, available on request, see variant codes.				

Increased safety motors with aluminium frame in brief, basic design

Motor size		112	132	160	180	200	225	250
Stator	Material Surface treatment	Die-cast aluminium alloy. Polyester powder paint. Munsell blue 8B 4.5/3.25 / NCS 4822-B05G. ≥ 50 µm.				Extruded aluminium alloy.		
Feet	Material	Aluminium alloy. Integrated with the stator.				Aluminium alloy, bolted to the stator.		250-2, cast iron
Bearing end shields	Material Surface treatment	Die-cast aluminium alloy.			Flanged bearing end shields of cast iron, other die-cast aluminium alloy Two-component oxyranester paint, Munsell blue 8B 4.5/3.25 / NCS 4822-B05G. ≥ 50 µm.			
Bearings **Single-speed motors**	D-end N-end	6206-2Z/C3 6205-2Z/C3	6208-2Z/C3 6206-2Z/C3	6309-2Z/C3 6209-2Z/C3	6310-2Z/C3 6209-2Z/C3	6312/C3 6210/C3	6313/C3 6212/C3	6315/C3 6213/C3
Axially-locked bearings	Inner bearing cover	D-end[1)]	D-end[1)]	D-end	D-end	D-end	D-end	D-end
		[1)] Foot-mounted motor. A spring washer at N-end presses the rotor against D-end. Flange-mounted motors: Inner bearing cover and spring-washer at the N-end.						
Bearing seal	D-end N-end	V-ring. Two-speed 112, 132 M, V-ring. Other labyrinth seal.				Outer and inner V-rings. Outer and inner V-rings.		
Lubrication		Permanently lubricated bearings. Grease for bearing temperatures -25 to +125°C.				Valve lubrication. Grease for bearing temperatures -25 to +125°C.		
Terminal box	Material Surface treatment Screws	Die-cast aluminium alloy. Base integrated with stator. Similar to stator. Steel 5G. Galvanised and chromated.				Deep-drawn steel sheet, bolted to stator. Phosphated. Polyester paint.		
Connections	Knock-out openings	M25 + M20 2 x (Pg 21 + Pg 16)		2 x M40 + M20 4 x Pg 29 + Pg 11		2 x M63 + M12		
	Flange-openings					2 x FL 13.2 x Pr 37 2 x Pg 29		
	Flange-openings for voltage code S					2 x FL 21.2 x Pr 54 2 x Pg 42		
	Terminal box	Cable lugs. 6 terminals.						
	Max Cu-area, mm^2	M5 10	M5 10	M6 35	M6 35	M10 70	M10 70	M10 70
Fan	Material	Polypropylene. Reinforced with 20% glass fibre.						
Fan cover	Material Surface treatment	Polypropylene. See also note		Steel sheet. [1)] [1)] Phosphated. Polyester paint. [1)]			[1)] Also two-speed sizes 112, 132 M.	
Stator winding	Material Impregnation Insulation class Winding protection	Copper Polyester vanish. Tropicalised. Insulation class F. Temperature rise class B, unless otherwise stated. On request, see variant codes				PTC-thermistors, 150°C		
Rotor winding	Material	Die-cast aluminium.						
Balancing method		Half key balancing.						
Key way		Closed key way						
Enclosure		IP 55						
Cooling method		IC 411						
Drain holes		Drain holes with closable plastic plugs. Open on delivery.						

Increased safety motors with cast iron frame in brief, basic design

Motor size		80	90	100	112	132	160	180
Stator	Material Paint colour shade	Cast iron EN-GJL-200 Blue, Munsell 8B 4.5/3.25 / NCS 4822 B05G						
	Paint thickness	Two-pack PUR-paint, thickness ≥ 60 µm					Two-pack epoxy paint, thickness ≥ 80µm	
Bearing end shields	Material	Cast iron EN-GJL-150					Cast iron EN-GJL-200	
	Paint colour shade	Blue, Munsell 8B 4.5/3.25 / NCS 4822 B05G						
	Paint thickness	Two-pack PUR-paint, thickness ≥ 60 µm					Two-pack epoxy paint, thickness ≥ 80µm	
Bearings	D-end	6204-2Z/C3	6205-2Z/C3	6206-2Z/C3	6206-2Z/C3	6208-2Z/C3	6309/C3	6310/C3
	N-end	6204-2Z/C3	6205-2Z/C3	6206-2Z/C3	6206-2Z/C3	6208-2Z/C3	6309/C3	6109/C3
Axially-locked bearings	Inner bearing cover	On request					As standard, locked at D-end	
Bearing seal		2RS-integral seals					Gamma ring as standard, radial seal on request	
Lubrication		Permanent grease lubrication.					Regreasable bearings as standard, lifetime lubrication as option	
SPM-nipples		–					As standard	
Rating plate	Material	Stainless steel 0.80 Cr 18 Ni9					Stainless steel	
Terminal box	Frame material Cover material Cover screws material	Cast iron EN-GJL-150 Cast iron EN-GJL-150 Steel 5G, coated with zinc and yellow cromated					Cast iron EN-GJL-200 Cast iron EN-GJL-200	
Connections	Cable entries	2xM25	2xM25	2xM32	2xM32	2xM32	2xM40	2xM40
	Terminals	6 terminals for connection with cable lugs (not included)						
Fan	Material	Reinforced glass fiber						
Fan cover	Material Paint colour shade	Steel Blue, Munsell 8B 4.5/3.25 / NCS 4822 B05G					Zinc coated steel	
	Paint thickness	Two-pack PUR-paint, thickness ≥ 60 µm					Polyester powder paint,thickness ≥ 80 µm	
Stator winding	Material Insulation	Copper Insulation class F						
	Winding protection	On request					3 pcs thermistors	
Rotor winding	Material	Pressure die-cast aluminium						
Balancing method		Half key balancing						
Key ways		Open key way					Closed key-way	
Drain holes		Optional, see variant codes					As standard open on delivery	
External earthing		External earthing bolt						
Enclosure		IP 55, higher protection on request						
Cooling method		IC 411						

Increased safety motors with cast iron frame in brief, basic design

Motor size		200	225	250	280	315	355	400
Stator	Material Paint colour shade	Cast iron EN-GJL-200 Blue, Munsell 8B 4.5/3.25 / NCS 4822 B05G			Cast iron EN-GJL-200			
	Paint thickness	Two-pack epoxy paint, thickness ≥ 80 µm						
Bearing end shields	Material Paint colour shade	Cast iron EN-GJL-200 Blue, Munsell 8B 4.5/3.25 / NCS 4822 B05G			Cast iron EN-GJL-200, except flange-mounted sizes 355-400 Spheroidal graphit EN-GJS-400			
	Paint thickness	Two-pack epoxy paint, thickness ≥ 70 µm						
Bearings	D-end 2-pole 4-12 -pole	6312/C3	6313/C3	6315/C3	6316/C4 6316/C3	6316/C4 6319/C3	6319M/C4 6322/C3	6319M/C4 6322/C3
	N-end 2-pole 4-12 -pole	6310/C3	6312/C3	6313/C3	6316/C4 6316/C3	6316/C4 6316/C3	6319M/C4 6319/C3	6319M/C4 6319/C3
Axially-locked bearings	Inner bearing cover	As standard, locked at D-end						
Bearing seals		Gamma ring as standard, radial seal on request			V-ring as standard, radial seal on request			
Lubrication		Regreasable bearings as standard, lifetime lubrication as option			Regreasable bearings, regreasing nipples, M10x1			
SPM-nipples		As standard			Optional		As standard	
Rating plate	Material	Stainless steel						
Terminal box	Frame material Cover material Cover screws material	Cast iron EN-GJL-200 Cast iron EN-GJL-200 Steel 5G, coated with zinc and yellow cromated						
Connections	Cable-entries 2-4 pole 6-8 pole	2xM50	2xM50	2xM50	2xM63	2xM63	2xØ60/80 2xØ60	2xØ80 2xØ60/80
	Terminals	6 terminals for connection with cable lugs (not included)						
Fan	Material	Reinforced glass fiber laminate or aluminium			Reinforced glass fiber, aluminium or polypropylene with metal hub			
Fan cover	Material Paint colour shade	Zinc coated steel Blue, Munsell 8B 4.5/3.25 / NCS 4822 B05G			Steel			
	Paint thickness	Two-pack epoxy polyester paint, thickness ≥ 80 µm						
Stator winding	Material Insulation	Copper Insulation class F						
	Winding protection	3 pcs thermistors						
Rotor winding	Material	Pressure die-cast aluminium			Pressure die-cast aluminium or copper			
Balancing method		Half key balancing						
Key way		Closed key way			Open key way			
Drain holes		As standard, open on delivery						
External earthing		External earthing bolt as standard						
Enclosure		IP 55, higher protection on request						
Cooling method		IC 411						

Non-sparking EEx nA, Ex nA, Ex N

Range

	Standards	Frame	Size	Output range
Non-sparking Ex nA	IEC 79-15	aluminium cast iron	63 - 250 71 - 400	0.18 - 75 kW 0.25 - 630 kW
Non-sparking Ex N	BS 5000:16	aluminium cast iron	63 - 250 280 - 400	0.18 - 75 kW 75 - 630 kW
Non-sparking EEx nA	EN 50021	cast iron	71-250	0.25 - 75 kW

Terminal boxes

Terminal boxes are mounted on the top of the basic motor versions. The terminal box can also be placed on either side of the motor besides on cast iron 160 to 250 motors. The terminal box is either rotatable or at least allows cable entry from either side which gives a choice of connection possibilities.

Protection class of the standard terminal box is IP 55.

Aluminium motors

In sizes 63 to 180 the terminal box is made of aluminium, the bottom section is integrated with the stator and provided with two openings on both sides. Cable glands are not supplied.

In sizes 200 to 250 the terminal box and cover are made of deep drawn steel, bolted to the stator. The terminal box is provided with two flange openings, one on each side. Cable glands are not supplied.

Cast iron motors

The terminal boxes in motors 71-132 and 200-250 are 4x90° turnable as standard, in motor sizes 160 to 180 and 280-400 as standard 2x180° and as easy option 4x90°.

In sizes 80 to 132 the motors are provided with cast iron terminal boxes with tapped cable entry holes on one side. Cable glands can be provided on request, see variant codes. In motor sizes 160 to 400 the cast iron terminal box is equipped with cable glands or cable boxes as standard.

Co-ordination of terminal boxes and cable entries

If no ordering information on the cable is given, it is assumed to be p.v.c. -insulated and termination parts are supplied according to the following tables.

Aluminium motors sizes 63-180 and cast iron motors sizes 160-250 are as standard fitted with metric threads.

Motor sizes 63-250 with aluminium frame

Voltage 220 - 690 V, 50 Hz

Motor size	Opening	Metric cable entry	Comparison Pg gland	Cable diameter mm, min-max.	Max.connection cable area mm²	Terminal bolt size 6 x
63	[1]	**4 x M16**	4 x Pg 11	2x Ø5.5-10	2.5	
71-100	[1]	**4 x M20**	4 x Pg 16	2x Ø8-13	2.5	
112-132	[1]	**M25 + M20**	2 x (Pg 21 + Pg 16)	2x Ø11-17	10	M5
160-180	[1]	**2 x M40 + M12**	4 x Pg 29 + 2 x Pg 9	2x Ø19-27	35	M6
200-250	2 x FL 13	**2 x M63 + M12**	2 x Pg 29	2x Ø19-27	70	M10

[1] Knockout openings

Motor sizes 71-250 with cast iron frame

Motor size	Metric cable entry	Comparison Pg gland	Cable gland diameter mm, min-max.	Max. connection cable area mm²	Terminal bolt size 6 x
71	**2 x M16**	2 x Pg 11	2x Ø5-10	6	M4
80-90	**2 x M25**	2 x Pg 16	2x Ø8-13	6	M4
100-112	**2 x M32**	2 x Pg 21	2x Ø15-20	16	M5
132	**2 x M32**	2 x Pg 21	2x Ø15-20	16	M5
160	**2 x M40 + 2 x M20**	2 x Pg 29 + 2 x Pg 13.5	2x Ø18-27	25	M6
180	**2 x M40 + 2 x M20**	2 x Pg 29 + 2 x Pg 13.5	2x Ø18-27	25	M6
200	**2 x M50 + 2 x M20**	2 x Pg 36 + 2 x Pg 13.5	2x Ø26-35	35	M10
225	**2 x M50 + 2 x M20**	2 x Pg 36 + 2 x Pg 13.5	2x Ø26-35	50	M10
250	**2 x M50 + 2 x M20**	2 x Pg 42 + 2 x Pg 13.5	2x Ø32-49	70	M10

Co-ordination of terminal boxes and cable entries

Cast iron motors sizes 280-400 motors with top-mounted terminal box

Motor size	Flange or adapter	Cable box or cable gland	**Gland thread**	Cable diameter	Max. connection cable area mm²	Terminal bolt size	Voltage/ frequency code
3000 r/min (2 poles)							
280	3GZF 294 730-749	2x 3GZF 294 730-613	**2x M63x1.5**	2x Ø32-49	2x150	M12	
315	3GZF 294 730-753	2x 3GZF 294 730-613	**2x M63x1.5**	2x Ø32-49	2x240	M12	
355 S	MPMM-ZL1	3GZF 294 730-301		2x Ø48-60	4x240	M12	D
	-	3GZF 294 730-301		2x Ø48-60	2x240	M12	E
355 SM_	MPMM-ZL1	3GZF 294 730-301		2x Ø48-60	4x240	M12	
355 ML_	MPMM-ZL1	LNPB 3328		2x Ø60-80	4x240	M12	
400 M_	MPMM-ZL1	LNPB 3328		2x Ø60-80	4x240	M12	
400 LK_	MPMM-ZL1	LNPB 3328		2x Ø60-80	4x240	M12	
1500 r/min (4 poles)							
280	3GZF 294 730-749	2x 3GZF 294 730-613	**2x M63x1.5**	2x Ø32-49	2x150	M12	
315	3GZF 294 730-753	2x 3GZF 294 730-613	**2x M63x1.5**	2x Ø32-49	2x240	M12	
355 S	MPMM-ZL1	3GZF 294 730-301		2x Ø48-60	4x240	M12	D
	-	3GZF 294 730-301		2x Ø48-60	2x240	M12	E
355 SM_	MPMM-ZL1	3GZF 294 730-301		2x Ø48-60	4x240	M12	
355 ML_	MPMM-ZL1	LNPB 3328		2x Ø60-80	4x240	M12	
400 M_	MPMM-ZL1	LNPB 3328		2x Ø60-80	4x240	M12	
400 LKA	MPMM-ZL1	LNPB 3328		2x Ø60-80	4x240	M12	D
	MPMM-ZL1	LNPB 3328		2x Ø60-80	4x240	M12	E
400 LKB, LKC	MPMM-ZL1	LNPB 3328		2x Ø60-80	4x240	M12	
1000 r/min (6 poles)							
280	3GZF 294 730-749	2x 3GZF 294 730-613	**2x M63x1.5**	2x Ø32-49	2x150	M12	
315	3GZF 294 730-753	2x 3GZF 294 730-613	**2x M63x1.5**	2x Ø32-49	2x240	M12	
355 S, SMA	-	3GZF 294 730-301		2x Ø48-60	2x240	M12	
355 SMB	MPMM-ZL1	3GZF 294 730-301		2x Ø48-60	4x240	M12	D
	-	3GZF 294 730-301		2x Ø48-60	2x240	M12	E
355 ML_	MPMM-ZL1	3GZF 294 730-301		2x Ø48-60	4x240	M12	
400 M	MPMM-ZL1	LNPB 3328		2x Ø60-80	4x240	M12	D
	-	3GZF 294 730-301		2x Ø48-60	2x240	M12	E
400 MA, MB	MPMM-ZL1	LNPB 3328		2x Ø60-80	4x240	M12	
400 LKA	MPMM-ZL1	LNPB 3328		2x Ø60-80	4x240	M12	
400 LKB, LKC	MPMM-ZL1	LNPB 3328		2x Ø60-80	4x240	M12	D
	MPMM-ZL1	LNPB 3328		2x Ø60-80	4x240	M12	E
750 r/min (8 poles)							
280	3GZF 294 730-749	2x 3GZF 294 730-613	**2x M63x1.5**	2x Ø32-49	2x150	M12	
315	3GZF 294 730-753	2x 3GZF 294 730-613	**2x M63x1.5**	2x Ø32-49	2x240	M12	
355 S, SMA	-	3GZF 294 730-301		2x Ø48-60	2x240	M12	
355 MLA	-	3GZF 294 730-301		2x Ø48-60	2x240	M12	
355 MLC	MPMM-ZL1	3GZF 294 730-301		2x Ø48-60	4x240	M12	D
	-	3GZF 294 730-301		2x Ø48-60	2x240	M12	E
400 M	-	3GZF 294 730-301		2x Ø48-60	2x240	M12	D
400 MA	MPMM-ZL1	3GZF 294 730-301		2x Ø48-60	4x240	M12	D
	-	3GZF 294 730-301		2x Ø48-60	2x240	M12	E
400 LK_	MPMM-ZL1	LNPB 3328		2x Ø60-80	4x240	M12	

Voltage/frequency codes:
D - 380-420 VΔ 50 Hz, 660-690 VY 50 Hz, 440-480 VΔ 60 Hz
E - 500 VΔ 50 Hz, 575 VΔ 60 Hz

Examples:

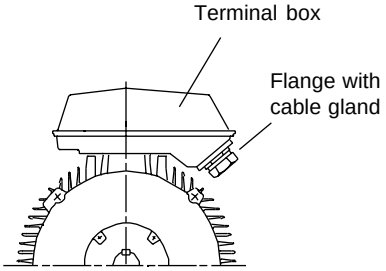

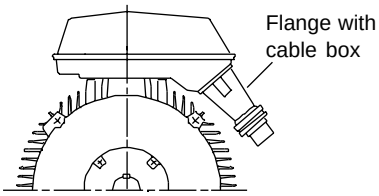

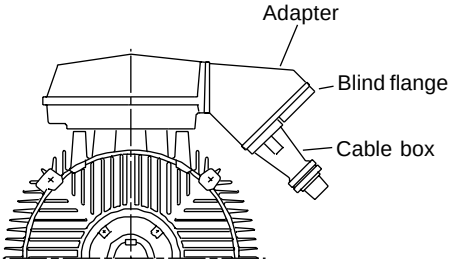

Co-ordination of terminal boxes and cable entries

Cast iron motors sizes 280-400 motors with side-mounted terminal box

Motor size	Flange or adapter	Cable box or cable gland	**Gland thread**	Cable diameter	Max. connection cable area mm²	Terminal bolt size	Voltage/ frequency code
3000 r/min (2 poles)							
280	3GZF 294 730-749	2x 3GZF 294 730-613	**2x M63x1.5**	2x Ø32-49	2x150	M12	
315	3GZF 294 730-753	2x 3GZF 294 730-613	**2x M63x1.5**	2x Ø32-49	2x240	M12	
355 S	3GZF 294 730-759	3GZF 294 730-301		2x Ø48-60	4x240	M12	D
	-	3GZF 294 730-301		2x Ø48-60	2x240	M12	E
355 SM_	3GZF 294 730-759	3GZF 294 730-301		2x Ø48-60	4x240	M12	
355 ML_	3GZF 294 730-759	LNPB 3328		2x Ø60-80	4x240	M12	
400 M_	3GZF 294 730-759	LNPB 3328		2x Ø60-80	4x240	M12	
400 LK_	3GZF 294 730-759	LNPB 3328		2x Ø60-80	4x240	M12	
1500 r/min (4 poles)							
280	3GZF 294 730-749	2x 3GZF 294 730-613	**2x M63x1.5**	2x Ø32-49	2x150	M12	
315	3GZF 294 730-753	2x 3GZF 294 730-613	**2x M63x1.5**	2x Ø32-49	2x240	M12	
355 S	3GZF 294 730-759	3GZF 294 730-301		2x Ø48-60	4x240	M12	D
	-	3GZF 294 730-301		2x Ø48-60	2x240	M12	E
355 SM_	3GZF 294 730-759	3GZF 294 730-301		2x Ø48-60	4x240	M12	
355 ML_	3GZF 294 730-759	LNPB 3328		2x Ø60-80	4x240	M12	
400 M_	3GZF 294 730-759	LNPB 3328		2x Ø60-80	4x240	M12	
400 LKA	3GZF 294 730-759	LNPB 3328		2x Ø60-80	4x240	M12	D
	3GZF 294 730-759	LNPB 3328		2x Ø60-80	4x240	M12	E
400 LKB, LKC	3GZF 294 730-759	LNPB 3328		2x Ø60-80	4x240	M12	
1000 r/min (6 poles)							
280	3GZF 294 730-749	2x 3GZF 294 730-613	**2x M63x1.5**	2x Ø32-49	2x150	M12	
315	3GZF 294 730-753	2x 3GZF 294 730-613	**2x M63x1.5**	2x Ø32-49	2x240	M12	
355 S	-	3GZF 294 730-301		2x Ø48-60	2x240	M12	
355 SMB	3GZF 294 730-759	3GZF 294 730-301		2x Ø48-60	4x240	M12	D
	-	3GZF 294 730-301		2x Ø48-60	2x240	M12	E
355 MLA	3GZF 294 730-759	3GZF 294 730-301		2x Ø48-60	4x240	M12	
400 M	3GZF 294 730-759	LNPB 3328		2x Ø60-80	4x240	M12	D
	-	3GZF 294 730-301		2x Ø48-60	2x240	M12	E
400 MA, MB	3GZF 294 730-759	LNPB 3328		2x Ø60-80	4x240	M12	
400 LKA	3GZF 294 730-759	LNPB 3328		2x Ø60-80	4x240	M12	
400 LKB, LKC	3GZF 294 730-759	LNPB 3328		2x Ø60-80	4x240	M12	D
	3GZF 294 730-759	LNPB 3328		2x Ø60-80	4x240	M12	E
750 r/min (8 poles)							
280	3GZF 294 730-749	2x 3GZF 294 730-613	**2x M63x1.5**	2x Ø32-49	2x150	M12	
315	3GZF 294 730-753	2x 3GZF 294 730-613	**2x M63x1.5**	2x Ø32-49	2x240	M12	
355 S	-	3GZF 294 730-301		2x Ø48-60	2x240	M12	
355 MLA	-	3GZF 294 730-301		2x Ø48-60	2x240	M12	
355 MLC	3GZF 294 730-759	3GZF 294 730-301		2x Ø48-60	4x240	M12	D
	-	3GZF 294 730-301		2x Ø48-60	2x240	M12	E
400 M	-	3GZF 294 730-301		2x Ø48-60	2x240	M12	D
400 MA	3GZF 294 730-759	3GZF 294 730-301		2x Ø48-60	4x240	M12	D
	-	3GZF 294 730-301		2x Ø48-60	2x240	M12	E
400 LK_	3GZF 294 730-759	LNPB 3328		2x Ø60-80	4x240	M12	

Voltage/frequency codes:
D - 380-420 VΔ 50 Hz, 660-690 VY 50 Hz, 440-480 VΔ 60 Hz
E - 500 VΔ 50 Hz, 575 VΔ 60 Hz

Examples:

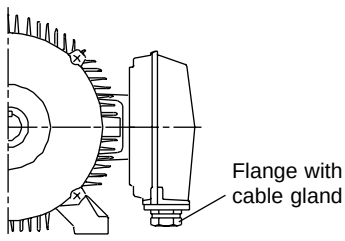

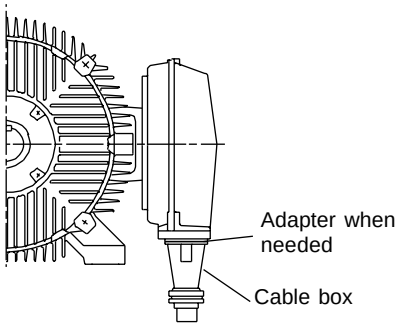

Auxiliary devices (view from N-end):

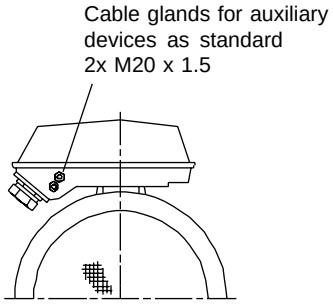

Technical data – Non-sparking motors

Aluminium frame, sizes 63 to 250

IP 55, IC 411; Insulation class F, temperature rise class B

Output kW	De-sign	Type designation	Product code	Speed r/min	Efficiency Full load 100%	Efficiency 3/4 load 75%	Power factor cos φ	Current I_N A	Current $\frac{I_s}{I_N}$	Torque T_N Nm	Torque $\frac{T_s}{T_N}$	Torque $\frac{T_{max}}{T_N}$	Moment of inertia J=1/4 GD² kgm²	Weight kg	Sound pressure level LP dB(A)
3000 r/min = 2 poles				**400 V 50 Hz**											
0.25		**M2AA 63 B**	3GAA 061 001-••A	2820	70.6	70.2	0.75	0.7	4.0	0.85	2.2	2.7	0.0002	4.5	48
0.25		**63 B***	061 002-••A	2820	70.6	70.2	0.75	0.7	4.0	0.85	2.2	2.7	0.0002	4.5	48
0.37		**71 A**	071 001-••A	2840	72.7	72.1	0.80	0.93	4.5	1.25	2.2	2.7	0.0004	5.5	55
0.55		**71 B**	071 002-••A	2850	76.1	75.1	0.80	1.35	5.0	1.9	2.2	2.7	0.0005	6.5	55
0.75 [2]	**HO**	**71 C**	071 003-••A	2820	77.1	77.3	0.80	1.75	5.0	2.5	2.2	2.7	0.0006	7.5	55
0.75		**80 A**	081 001-••A	2860	78.8	79.1	0.82	1.7	5.0	2.5	2.2	2.7	0.0009	9	58
1.1		**80 B**	081 002-••A	2870	80.1	80.8	0.85	2.4	5.5	3.7	2.4	3.0	0.0011	10	58
1.5 [2]	**HO**	**80 C**	081 003-••A	2840	80.1	81.4	0.87	3.15	5.5	5	2.3	2.8	0.0013	11	58
1.5		**90 S**	091 001-••A	2870	80.1	80.8	0.82	3.35	5.5	5	2.4	3.0	0.0019	13	63
2.2		**90 L**	091 002-••A	2870	82.8	83.3	0.86	4.55	7.0	7.5	2.7	3.4	0.0024	16	63
2.7 [2]	**HO**	**90 LB**	091 003-••A	2860	80.7	81.7	0.86	5.7	7.0	9	2.6	3.2	0.0027	18	63
3		**100 L**	101 001-••A	2900	83.8	83.7	0.88	5.95	7.5	10	2.7	3.6	0.0041	21	68
4 [2]	**HO**	**100 LB**	101 002-••A	2900	84.1	84.3	0.86	8.1	7.5	13	2.7	3.6	0.005	25	68
4		**112 M**	111 001-••A	2850	86.0	86.0	0.91	7.4	7.5	13.4	2.8	3.0	0.01	25	63
5.5 [2]	**HO**	**112 MB**	111 002-••A	2855	86.5	86.5	0.93	9.9	7.3	18.4	2.7	2.9	0.012	33	63
5.5		**132 SA**	131 001-••A	2855	86.0	86.0	0.88	10.5	7.8	18.4	3.2	3.4	0.014	37	69
7.5		**132 SB**	131 002-••A	2855	87.0	87.0	0.90	13.9	8.5	25	3.4	3.6	0.016	42	69
11 [2]	**HO**	**132 SC**	131 003-••A	2835	87.0	87.0	0.93	19.6	8.0	37	3.2	3.3	0.022	56	69
11		**160 MA**	161 101-••A	2930	91.2	92.1	0.88	20	6.3	36	1.9	2.5	0.039	73	69
15		**160 M**	161 102-••A	2920	91.7	91.7	0.90	26.5	6.6	49	2.3	2.5	0.047	84	69
18.5		**160 L**	161 103-••A	2920	92.4	92.4	0.91	32	7.3	60	2.6	2.7	0.053	94	69
22 [2]	**HO**	**160 LB**	161 104-••A	2920	92.1	92.1	0.91	38	7.1	72	2.6	2.6	0.058	100	69
22		**180 M**	181 101-••A	2930	92.8	92.8	0.89	38.5	7.2	71	2.5	2.7	0.077	119	69
30 [2]	**HO**	**180 LB**	181 102-••A	2945	93.7	93.7	0.89	53	8.3	97	3.1	3.4	0.92	137	70
30		**200 MLA**	201 001-••A	2955	93.2	93.2	0.88	53	7.3	97	2.4	3.1	0.15	175	72
37		**200 MLB**	201 002-••A	2950	93.6	93.6	0.89	64	7.3	120	2.5	3.2	0.18	200	72
45 [2]	**HO**	**200 MLC**	201 003-••A	2950	93.8	93.8	0.89	78	7.3	146	2.6	3.3	0.19	205	72
45		**225 SMB**	221 001-••A	2960	93.9	93.9	0.88	79	7.3	145	2.5	2.8	0.26	235	74
55	**HO**	**225 SMC**	221 002-••A	2960	94.3	94.3	0.89	95	7.0	177	2.5	2.9	0.29	260	74
55		**250 SMA**	251 001-••A	2970	94.4	94.4	0.89	95	7.5	177	2.0	3.0	0.49	285	75
75	**HO**	**250 SMB**	251 002-••A	2970	95.2	95.2	0.90	127	7.3	241	2.1	3.0	0.57	330	75

*) Shaft Ø 14 mm, large flange F130.
[2] Temperature rise acc. to class F.

Design: HO = High-output design. The output of these motors is one step higher than the basic with rated outputs in accordance with CENELEC:

Data for other voltages on request.

The two bullets in the product code indicate choice of mounting arrangement (see ordering information), voltage and frequency (below).

Motor size	S 50 Hz	S 60 Hz	D 50 Hz	D 60 Hz	H 50 Hz	E 50 Hz	F 50 Hz	T 50 Hz	U 50 Hz	X
63-100	220-240 VΔ 380-420 VY	440-480 VY	380-420 VΔ 660-690 VY	440-480 VΔ –	–	500 VΔ	500 VY	660 VΔ[1]	690 VΔ[1]	Other rated voltage, connection or frequency, 690 V maximum
112-132	220-240 VΔ 380-420 VY	– 440-480 VY	380-420 VΔ 660-690 VY	440-480 VΔ –	415 VΔ	500 VΔ		660 VΔ	690 VΔ	
160-250	220,230 VΔ 380,400,415 VY	– 440 VY	380,400,415 VΔ 660-690 VY	440 VΔ –	415 VΔ	500 VΔ		660 VΔ	690 VΔ	

[1] On request

Technical data – Non-sparking motors

Aluminium frame, sizes 63 to 250

IP 55, IC 411; Insulation class F, temperature rise class B

Output kW	Design	Type designation	Product code	Speed r/min	Efficiency Full load 100%	Efficiency 3/4 load 75%	Power factor cos φ	Current I_N A	Current $\frac{I_s}{I_N}$	Torque T_N Nm	Torque $\frac{T_s}{T_N}$	Torque $\frac{T_{max}}{T_N}$	Moment of inertia J=1/4 GD² kgm²	Weight kg	Sound pressure level LP dB(A)
1500 r/min = 4 poles				**400 V 50 Hz**											
0.18		**M2AA 63 B**	3GAA 062 001-••A	1370	58.7	54.5	0.63	0.72	3.0	1.25	2.2	2.6	0.0003	4.5	37
0.18		**63 B***	062 002-••A	1370	58.7	54.5	0.63	0.72	3.0	1.25	2.2	2.6	0.0003	4.5	37
0.25		**71 A**	072 001-••A	1400	66.8	63.5	0.67	0.83	3.5	1.7	2.2	2.7	0.0007	5.5	45
0.37		**71 B**	072 002-••A	1410	70.5	70.3	0.69	1.12	4.0	2.5	2.2	2.7	0.001	6.5	45
0.55 [2]	**HO**	**71 C**	072 003-••A	1380	72.5	72.2	0.73	1.5	4.0	3.7	2.2	2.4	0.0012	7.5	45
0.55		**80 A**	082 001-••A	1420	74.0	73.3	0.73	1.45	4.0	3.7	2.2	2.7	0.0017	9	48
0.75		**80 B**	082 002-••A	1420	77.0	76.6	0.74	1.9	4.5	5	2.2	2.7	0.0021	10	48
1.1 [2]	**HO**	**80 C**	082 003-••A	1380	76.1	79.7	0.80	2.65	4.5	7.5	2.0	2.2	0.0024	11	48
1.1		**90 S**	092 001-••A	1410	77.5	78.2	0.81	2.59	5.0	7.5	2.2	2.7	0.0032	13	50
1.5		**90 L**	092 002-••A	1420	80.3	80.2	0.79	3.45	5.0	10	2.4	2.9	0.0043	16	50
1.85 [2]	**HO**	**90 L**	092 003-••A	1390	79.5	80.2	0.80	4.4	4.5	13	2.2	2.4	0.0043	16	50
2.2 [2]	**HO**	**90 LB**	092 004-••A	1390	80.3	82.1	0.83	4.85	4.5	15	2.2	2.4	0.0048	17	50
2.2		**100 LA**	102 001-••A	1430	81.7	82.5	0.81	4.8	5.5	15	2.4	2.9	0.0069	21	54
3		**100 LB**	102 002-••A	1430	83.5	84.0	0.81	6.48	5.5	20	2.5	2.9	0.0082	24	54
4 [2]	**HO**	**100 LC**	102 003-••A	1420	82.7	83.7	0.82	8.73	5.5	27	2.5	2.8	0.009	25	54
4		**112 M**	112 001-••A	1435	84.5	85.5	0.80	8.6	7.0	27	2.8	3.0	0.015	27	56
5.5 [2]	**HO**	**112 MB**	112 002-••A	1425	84.5	85.5	0.83	11.4	7.1	37	2.8	3.1	0.018	34	56
5.5		**132 S**	132 001-••A	1450	87.0	87.0	0.83	11.1	7.3	36	2.2	3.0	0.031	40	59
7.5		**132 M**	132 002-••A	1450	88.0	88.0	0.83	14.8	7.9	49	2.5	3.2	0.038	48	59
11 [2]	**HO**	**132 MB**	132 003-••A	1450	88.0	88.0	0.86	21	8.3	72	3.0	2.7	0.048	59	59
11		**160 M**	162 101-••A	1460	90.3	90.3	0.81	21.5	6.7	72	2.9	2.8	0.067	75	62
15		**160 L**	162 102-••A	1455	91.1	91.1	0.84	28.5	6.8	98	3.0	2.8	0.091	94	62
18.5 [2]	**HO**	**160 LB**	162 103-••A	1450	90.5	90.5	0.84	36	6.9	122	2.9	2.9	0.102	103	63
18.5		**180 M**	182 101-••A	1470	92.3	92.3	0.84	35	7.0	120	3.1	2.7	0.161	124	62
22		**180 L**	182 102-••A	1470	92.4	92.4	0.83	41	7.0	143	2.9	2.8	0.191	141	63
30 [2]	**HO**	**180 LB**	182 103-••A	1465	92.5	92.5	0.84	56	6.9	195	3.2	2.8	0.225	161	63
30		**200 MLA**	202 001-••A	1475	92.9	92.9	0.83	56	7.3	194	3.7	2.8	0.29	180	63
37	**HO**	**200 MLB**	202 002-••A	1475	93.4	93.4	0.84	68	7.8	236	3.6	3.2	0.34	205	63
37		**225 SMA**	222 001-••A	1480	93.6	93.6	0.84	68	6.6	239	2.4	2.5	0.37	215	66
45		**225 SMB**	222 002-••A	1480	94.2	94.2	0.83	83	6.7	290	2.7	2.6	0.42	230	66
55	**HO**	**225 SMC**	222 003-••A	1480	94.6	94.6	0.84	100	7.3	355	3.1	2.8	0.49	265	66
55		**250 SMA**	252 001-••A	1480	94.6	94.6	0.86	98	7.5	355	2.3	2.8	0.72	275	67
75	**HO**	**250 SMB**	252 002-••A	1480	95.0	95.0	0.86	132	7.0	484	2.4	3.0	0.88	335	67

*) Shaft Ø 14 mm, large flange F130.
2) Temperature rise acc. to class F.

Design:HO = High-output design. The output of these motors is one step higher than the basic with rated outputs in accordance with CENELEC:

Data for other voltages on request.

The two bullets in the product code indicate choice of mounting arrangement (see ordering information), voltage and frequency (below).

Motor size	S 50 Hz	S 60 Hz	D 50 Hz	D 60 Hz	H 50 Hz	E 50 Hz	F 50 Hz	T 50 Hz	U 50 Hz	X
63-100	220-240 VΔ 380-420 VY	 440-480 VY	380-420 VΔ 660-690 VY	440-480 VΔ –	–	500 VΔ	500 VY	660 VΔ[1]	690 VΔ[1]	Other rated voltage, connection or frequency, 690 V maximum
112-132	220-240 VΔ 380-420 VY	– 440-480 VY	380-420 VΔ 660-690 VY	440-480 VΔ –	415 VΔ	500 VΔ		660 VΔ	690 VΔ	
160-250	220,230 VΔ 380,400,415 VY	– 440 VY	380,400,415 VΔ 660-690 VY	440 VΔ –	415 VΔ	500 VΔ		660 VΔ	690 VΔ	

1) On request

Technical data – Non-sparking motors

Aluminium frame, sizes 63 to 250

IP 55, IC 411; Insulation class F, temperature rise class B

Output kW	De-sign	Type designation	Product code	Speed r/min	Efficiency Full load 100%	Efficiency 3/4 load 75%	Power factor cos φ	Current I_N A	Current I_s/I_N	Torque T_N Nm	Torque T_s/T_N	Torque T_{max}/T_N	Moment of inertia J=1/4 GD² kgm²	Weight kg	Sound pressure level LP dB(A)
1000 r/min = 6 poles				**400 V 50 Hz**											
0.12		**M2AA 71**	3GAA 073 001-••A	930	55.4	50.2	0.56	0.59	2.5	1.2	2.3	2.7	0.0007	5	36
0.18		**71 A**	073 002-••A	920	57.8	53.7	0.62	0.75	2.5	1.9	2.0	2.4	0.0007	5.5	36
0.25		**71 B**	073 003-••A	920	62.0	59.7	0.64	0.92	3.0	2.6	2.0	2.4	0.0009	6.5	36
0.37 [2]	**HO**	**71 C**	073 004-••A	890	63.0	62.4	0.70	1.27	3.0	3.8	1.7	1.9	0.0012	7.5	36
0.37		**80 A**	083 001-••A	920	68.0	65.8	0.66	1.25	3.5	3.8	2.1	2.5	0.0017	8.5	43
0.55		**80 B**	083 002-••A	930	69.8	68.3	0.67	1.78	3.5	5.7	2.1	2.5	0.0021	9.5	43
0.75 [2]	**HO**	**80 C**	083 003-••A	910	71.5	71.8	0.70	2.27	3.5	7.5	1.9	2.2	0.0024	11	43
0.75		**90 S**	093 001-••A	930	71.5	72.3	0.67	2.36	4.0	7.5	1.9	2.3	0.0032	13	44
1.1		**90 L**	093 002-••A	930	74.4	74.2	0.69	3.25	4.0	11	1.9	2.3	0.0043	16	44
1.3 [2]	**HO**	**90 LB**	093 003-••A	910	72.4	73.2	0.71	3.85	4.0	13.5	1.9	2.2	0.0048	18	44
1.5		**100 L**	103 001-••A	950	78.2	78.3	0.69	4.1	4.5	15	1.9	2.3	0.0082	23	49
2.2 [2]	**HO**	**100 LC**	103 002-••A	940	79.0	79.7	0.71	5.8	4.5	22	1.9	2.3	0.009	26	49
2.2		**112 M**	113 001-••A	940	80.5	80.5	0.74	5.4	5.6	22	2.1	2.7	0.015	27	54
3 [2]	**HO**	**112 MB**	113 002-••A	935	80.0	80.0	0.76	7.2	5.5	31	2.4	2.7	0.018	33	54
3		**132 S**	133 001-••A	960	84.5	84.5	0.75	6.9	6.1	30	2.4	2.6	0.031	39	61
4		**132 MA**	133 002-••A	960	85.5	85.5	0.78	8.7	7.1	40	2.6	2.8	0.038	46	61
5.5		**132 MB**	133 003-••A	955	86.0	86.0	0.78	11.9	6.9	55	2.8	2.8	0.045	54	61
6.5 [2]	**HO**	**132 MC**	133 004-••A	960	85.0	85.0	0.75	14.8	6.6	65	2.3	2.7	0.049	59	61
7.5		**160 M**	163 101-••A	970	89.3	89.3	0.79	15.4	6.7	74	2.0	2.8	0.089	88	59
11		**160 L**	163 102-••A	970	89.8	89.8	0.78	23	7.1	109	2.2	2.9	0.107	102	59
14 [2]	**HO**	**160 LB**	163 103-••A	960	89.1	89.1	0.77	29.5	7.6	139	2.7	3.1	0.127	117	62
15		**180 L**	183 101-••A	970	90.8	90.8	0.78	31	7.0	148	2.1	3.0	0.217	151	59
18.5 [2]	**HO**	**180 LB**	183 102-••A	965	90.6	90.6	0.79	37.5	6.2	183	2.0	2.6	0.237	160	59
18.5		**200 MLA**	203 001-••A	985	91.1	91.1	0.81	36	7.0	179	2.5	2.7	0.37	165	63
22		**200 MLB**	203 002-••A	980	91.7	91.7	0.81	43	7.2	214	2.5	2.7	0.43	185	63
30 [2]	**HO**	**200 MLC**	203 003-••A	980	91.7	91.7	0.81	56	7.5	292	3.3	3.0	0.49	200	63
30		**225 SMB**	223 001-••A	985	92.8	92.8	0.83	56	6.6	291	2.5	2.7	0.64	225	63
37 [2]	**HO**	**225 SMC**	223 002-••A	985	93.2	93.2	0.83	69	7.7	359	3.1	3.0	0.75	252	63
37		**250 SMA**	253 001-••A	985	93.7	93.7	0.83	69	7.3	359	2.8	2.8	1.16	280	63
45 [2]	**HO**	**250 SMB**	253 002-••A	985	94.1	94.1	0.84	82	7.3	436	2.8	2.8	1.49	320	63

[2] Temperature rise acc. to class F.

Design: HO = High-output design. The output of these motors is one step higher than the basic with rated outputs in accordance with CENELEC:

Data for other voltages on request.

Technical data – Non-sparking motors

Aluminium frame, sizes 63 to 250

IP 55, IC 411; Insulation class F, temperature rise class B

Output kW	Design	Type designation	Product code	Speed r/min	Efficiency Full load 100%	Efficiency 3/4 load 75%	Power factor cos φ	Current I_N A	Current I_s/I_N	Torque T_N Nm	Torque T_s/T_N	Torque T_{max}/T_N	Moment of inertia J=1/4 GD² kgm²	Weight kg	Sound pressure level LP dB(A)
750 r/min = 8 poles				**400 V 50 Hz**											
0.05		**63 B**	064 002-••A	650	32.2	27.5	0.62	0.44	1.5	0.8	1.6	2.0	0.0003	4.5	32
0.09		**71 A**	074 001-••A	680	43.4	38.6	0.63	0.53	2.0	1.3	1.7	2.0	0.0007	5.5	32
0.12		**71 B**	074 002-••A	680	48.6	45.0	0.59	0.63	2.0	1.8	1.7	2.0	0.0009	6.5	39
0.18 [2]	**HO**	**71 C**	074 003-••A	660	51.3	48.2	0.64	0.85	2.0	2.5	1.6	1.9	0.0012	7.5	39
0.18		**80 A**	084 001-••A	700	54.4	49.6	0.56	0.9	2.5	2.5	1.8	2.3	0.0017	8.5	44
0.25		**80 B**	084 002-••A	700	58.6	55.0	0.55	1.18	2.5	3.4	1.9	2.4	0.0021	9.5	44
0.37 [2]	**HO**	**80 C**	084 003-••A	680	58.2	60.1	0.60	1.6	3.0	5	1.7	1.9	0.0024	11	44
0.37		**90 S**	094 001-••A	700	61.5	58.2	0.56	1.6	3.0	5	1.9	2.4	0.0032	13	43
0.55		**90 L**	094 002-••A	700	62.9	60.3	0.57	2.35	3.0	7.5	1.9	2.4	0.0043	16	43
0.75 [2]	**HO**	**90 LB**	094 003-••A	680	66.9	65.8	0.65	2.6	3.0	10	1.8	2.1	0.0048	18	43
0.75		**100 LA**	104 001-••A	700	72.9	71.7	0.59	2.67	3.5	10	2.1	2.7	0.0069	20	46
1.1		**100 LB**	104 002-••A	700	74.0	73.0	0.64	3.42	3.5	15	2.1	2.7	0.0082	23	46
1.5 [2]	**HO**	**100 LC**	104 003-••A	700	74.0	73.6	0.66	4.6	3.5	21	1.8	2.2	0.009	26	46
1.5		**112 M**	114 001-••A	695	74.5	74.5	0.65	4.5	4.1	21	1.9	2.4	0.016	28	52
2 [2]	**HO**	**112 MB**	114 002-••A	685	73.5	74.6	0.67	5.9	4.4	28	1.9	2.2	0.018	33	52
2.2		**132 S**	134 001-••A	720	80.5	80.5	0.67	5.9	5.3	29	1.9	2.5	0.038	46	56
3		**132 M**	134 002-••A	720	82.0	82.1	0.68	7.8	5.5	40	2.4	2.6	0.045	53	56
3.8 [2]	**HO**	**132 MB**	134 003-••A	710	80.5	80.7	0.69	9.9	5.2	51	2.0	2.3	0.049	59	56
4		**160 MA**	164 101-••A	715	84.1	84.7	0.69	10	5.2	54	2.1	2.4	0.072	75	59
5.5		**160 M**	164 102-••A	710	84.7	85.5	0.70	13.4	5.4	74	2.4	2.6	0.091	88	59
7.5		**160 L**	164 103-••A	715	86.3	87.2	0.70	18.1	5.4	100	2.4	2.8	0.131	118	59
8.5 [2]	**HO**	**160 LB**	164 104-••A	700	83.5	85.0	0.70	21	5.1	115	2.4	2.5	0.131	118	62
11		**180 L**	184 101-••A	720	88.7	89.2	0.76	23.5	5.9	146	2.4	2.6	0.224	147	59
15 [2]	**HO**	**180 LB**	184 102-••A	720	88.0	89.2	0.76	32.5	6.0	199	2.5	2.6	0.24	155	62
15		**200 MLA**	204 001-••A	740	91.1	91.1	0.82	29	7.4	194	1.8	3.0	0.45	175	60
18.5	**HO**	**200 ML**	204 002-••A	745	91.4	91.4	0.81	36	6.7	237	1.7	2.8	0.54	200	60
18.5		**225 SMA**	224 001-••A	730	91.1	91.1	0.79	37	6.2	242	1.9	2.7	0.61	210	63
22		**225 SMB**	224 002-••A	730	91.5	91.5	0.77	45	6.0	288	1.9	2.7	0.68	225	63
30 [2]	**HO**	**225 SMC**	224 003-••A	735	91.8	91.8	0.79	60	7.2	390	2.1	3.3	0.8	255	63
30		**250 SMA**	254 001-••A	735	92.8	92.8	0.79	59	6.9	390	1.9	2.9	1.25	280	63
37	**HO**	**250 SMB**	254 002-••A	735	93.2	93.2	0.81	71	7.2	481	2.0	2.9	1.52	320	63

[2] Temperature rise acc. to class F.

Design: HO = High-output design. The output of these motors is one step higher than the basic with rated outputs in accordance with CENELEC:

Data for other voltages on request.

The two bullets in the product code indicate choice of mounting arrangement (see ordering information), voltage and frequency (below).

Motor size	S 50 Hz	S 60 Hz	D 50 Hz	D 60 Hz	H 50 Hz	E 50 Hz	F 50 Hz	T 50 Hz	U 50 Hz	X
63-100	220-240 VΔ 380-420 VY	440-480 VY	380-420 VΔ 660-690 VY	440-480 VΔ –	–	500 VΔ	500 VY	660 VΔ[1]	690 VΔ[1]	Other rated voltage, connection or frequency, 690 V maximum
112-132	220-240 VΔ 380-420 VY	– 440-480 VY	380-420 VΔ 660-690 VY	440-480 VΔ –	415 VΔ	500 VΔ		660 VΔ	690 VΔ	
160-250	220,230 VΔ 380,400,415 VY	– 440 VY	380,400,415 VΔ 660-690 VY	440 VΔ –	415 VΔ	500 VΔ		660 VΔ	690 VΔ	

[1] On request

Technical data – Non-sparking motors

Cast iron frame, sizes 71 to 400

IP 55, IC 411; Insulation class F, temperature rise class B

Output kW	De-sign	Type designation	Product code	Speed r/min	Efficiency Full load 100%	Efficiency 3/4 load 75%	Power factor cos φ	Current I_N A	Current I_s/I_N	Torque T_N Nm	Torque T_s/T_N	Torque T_{max}/T_N	Moment of inertia J=1/4 GD² kgm²	Weight kg	Sound pressure level LP dB(A)
3000 r/min = 2 poles				**400 V 50 Hz [1)]**											
0.37		**M2BA 71 M2 A**	3GBA 071 310-••A	2810	71.0	70.9	0.80	0.94	6.1	1.26	2.2	2.2	0.0003	10	56
0.55		**71 M2 B**	071 320-••A	2800	74.0	73.6	0.82	1.31	6.1	1.88	2.2	2.2	0.0004	11	56
0.75		**80 M2 A**	081 310-••A	2850	77.2	75.6	0.86	1.63	6.1	2.51	2.2	2.2	0.0009	16	57
1.1		**80 M2 B**	081 320-••A	2850	80.2	78.7	0.85	2.33	7.0	3.69	2.2	2.2	0.0011	17	58
1.5		**90 S2 A**	091 110-••A	2850	81.6	79.5	0.85	3.13	7.0	5.03	2.2	2.2	0.0014	21	61
2.2		**90 L2 A**	091 510-••A	2850	84.2	82.4	0.84	4.49	7.0	7.37	2.2	2.2	0.0016	24	61
3		**100 L2 A**	101 510-••A	2870	85.1	83.7	0.86	5.92	7.0	9.98	2.2	2.2	0.004	33	65
4		**112 M2 A**	111 310-••A	2900	86.0	85.5	0.89	7.52	7.0	13.17	2.2	2.2	0.0067	42	67
5.5		**132 S2 A**	131 110-••A	2920	88.6	87.9	0.88	10.19	7.0	17.99	2.2	2.2	0.0124	58	70
7.5		**132 S2 B**	131 120-••A	2920	89.9	89.4	0.89	13.54	7.0	24.53	2.2	2.2	0.0149	63	70
11		**M3GP 160 MLA**	3GGP 161 410-••G	2936	91.2	91.1	0.87	20	7.2	36	2.9	3.3	0.039	147	71
15		**160 MLB**	161 420-••G	2934	91.6	91.5	0.88	28	7.5	49	3.1	3.5	0.047	156	71
18.5		**160 MLC**	161 430-••G	2934	92.4	92.5	0.90	33	7.5	60	2.8	3.4	0.054	167	71
22	**HO**	**160 MLD**	161 440-••G	2929	91.4	91.3	0.90	39	7.4	72	2.8	3.4	0.059	173	77
22		**180 MLA**	181 410-••G	2938	92.6	92.7	0.90	39	6.9	72	2.5	3.1	0.077	194	71
30	**HO**	**180 MLB**	181 420-••G	2944	92.8	92.7	0.88	54	7.5	97	2.8	3.5	0.092	210	78
30		**200 MLA**	201 410-••G	2946	94.0	94.1	0.88	54	7.4	97	3.0	3.2	0.15	275	72
37		**200 MLC**	201 430-••G	2948	94.1	94.0	0.89	65	7.6	120	2.9	3.2	0.19	305	75
45		**225 SMB**	221 220-••G	2968	94.7	94.6	0.87	79	7.2	145	2.7	3.0	0.26	365	76
55	**HO**	**225 SMC**	221 230-••G	2965	94.3	94.0	0.88	96	7.1	177	2.6	3.0	0.29	385	80
55		**250 SMA**	251 210-••G	2970	94.6	94.3	0.88	96	7.7	177	2.4	3.1	0.49	425	75
75	**HO**	**250 SMB**	251 220-••G	2969	95.1	95.0	0.89	129	7.9	241	2.6	3.2	0.57	465	80
75		**M2BA 280 SMA**	3GBA 281 210-••A	2977	94.9	94.3	0.88	131	7.5	241	2.3	3.3	0.8	590	77
90		**280 SMB**	281 220-••A	2975	95.1	94.6	0.90	152	7.4	289	2.3	2.9	0.9	630	77
110	**HO**	**280 SMC**	281 230-••A	2977	95.8	95.4	0.90	184	7.9	353	2.4	3.0	1.15	690	77
110		**315 SMA**	311 210-••A	2982	95.1	94.4	0.86	194	7.6	352	2.0	3.0	1.2	860	80
132		**315 SMB**	311 220-••A	2982	95.4	94.9	0.88	228	7.4	423	2.2	3.0	1.4	920	80
160		**315 SMC**	311 230-••A	2981	96.1	95.6	0.89	269	7.5	513	2.3	3.0	1.7	1010	80
200		**315 MLA**	311 410-••A	2978	96.3	95.9	0.90	334	7.8	641	2.6	3.0	2.1	1170	80
250		**355 S**	351 100-••A	2980	96.1	95.7	0.92	410	6.6	801	1.3	3.0	3.8	1550	83
315		**355 SMA**	351 210-••A	2978	96.6	96.4	0.92	510	7.7	1010	1.3	3.3	4.8	1750	83
400		**355 MLA**	351 410-••A	2982	96.6	96.4	0.92	655	7.7	1281	1.6	3.3	6	2150	83
430		**355 MLC**	351 430-••A	2978	96.6	96.4	0.92	700	7.8	1379	1.3	3.3	6	2150	83
400		**400 M**	401 300-••A	2982	96.6	96.4	0.92	655	7.7	1281	1.6	3.3	6	2200	83
430		**400 MA**	401 310-••A	2978	96.6	96.4	0.92	700	7.8	1379	1.3	3.3	6	2200	83
560 [2)]		**400 LKB**	401 520-••A	2983	96.7	96.5	0.92	910	7.3	1793	0.7	3.4	8.5	2900	85
470 [2)]		**400 LKA**	401 510-••A	2981	96.6	96.5	0.93	750	7.4	1506	0.9	3.0	7.5	2850	85

[1)] Motors are certified for the voltages 380-400-415 V 50 Hz according to IEC 34-1. Values above are given for 400 V 50 Hz; data for other voltages on request.
[2)] Temperature rise class F

Design HO = High-output design. The output of these motors is one step higher than the basic with rated outputs in accordance with CENELEC.

Please note that the frequency converter application in critical conditions may require special rotor design within 355 to 400 frame motors. We therefore recommend a separate checking.

Notes:
- **When ordering sizes 160-200 with lifetime lubrication, variant code 195 'Bearings greased for life' has to be added.**

Data for other voltages and frequencies, on request. 2- and 4-pole Cenelec motors size 160-250 can be used at ambient 50°C in temperature rise max. 75 K (cl. F); for more information contact us.

The two bullets in the product code indicate choice of mounting arrangement (see ordering information), voltage and frequency (below).

S	D	A [a)]	B [a)]	E	F [b)]	X
380 VY 50 Hz 400 VY 50 Hz 415 VY 50 Hz 220 VΔ 50 Hz 230 VΔ 50 Hz 440 VΔ 60 Hz	380 VΔ 50 Hz 400 VΔ 50 Hz 415 VΔ 50 Hz 660 VY 50 Hz 690 VY 50 Hz[c)] 440 VΔ 60 Hz	380 VY 50 Hz 220 VΔ 50 Hz	380 VΔ 50 Hz 660 VY 50 Hz	500 VΔ 50 Hz 575 VΔ 60 Hz	500 VY 50 Hz	Other rated voltage, connection or frequency, max. 690 V
		G [a)]	**H [a)]**	**T [b)]**	**U [b)c)]**	
		415 VY 50 Hz	415 VΔ 50 Hz	660 VΔ 50 Hz	690 VΔ 50 Hz	

[a)] On request for motor sizes 315-400. [b)] On request for motor sizes 355-400.
[c)] Motor sizes 80-250: Not permitted for Ex N acc. to BS 5000:16. Motor sizes 280-400 available on VTT certificate.

Technical data – Non-sparking motors

Cast iron frame, sizes 71 to 400

IP 55, IC 411; Insulation class F, temperature rise class B

Output kW	Design	Type designation	Product code	Speed r/min	Efficiency Full load 100%	Efficiency 3/4 load 75%	Power factor cos φ	Current I_N A	Current I_s/I_N	Torque T_N Nm	Torque T_s/T_N	Torque T_{max}/T_N	Moment of inertia J=1/4 GD² kgm²	Weight kg	Sound pressure level LP dB(A)
1500 r/min = 4 poles				**400 V 50 Hz [1)]**											
0.25		**M2BA 71 M4 A**	3GBA 072 310-••A	1390	66.3	66.1	0.73	0.75	5.2	1.72	2.1	2.0	0.0005	11	43
0.37		**71 M4 B**	072 320-••A	1380	70.8	69.7	0.75	1.01	5.2	2.56	2.1	2.0	0.0007	11	45
0.55		**80 M4 A**	082 310-••A	1410	75.0	74.4	0.73	1.45	5.2	3.73	2.4	2.0	0.0014	16	46
0.75		**80 M4 B**	082 320-••A	1400	76.3	75.6	0.76	1.87	6.0	5.12	2.4	2.2	0.0017	17	46
1.1		**90 S4 A**	092 110-••A	1400	78.5	78.4	0.78	2.6	6.0	7.5	2.3	2.2	0.0025	21	52
1.5		**90 L4 A**	092 510-••A	1390	80.5	79.5	0.78	3.45	6.0	10.31	2.3	2.2	0.0037	26	52
2.2		**100 L4 A**	102 510-••A	1430	82.5	82.4	0.80	4.82	6.0	14.69	2.3	2.2	0.0068	32	53
3		**100 L4 B**	102 520-••A	1420	84.5	83.3	0.82	6.25	6.5	20.18	2.3	2.2	0.0086	36	53
4		**112 M4 A**	112 310-••A	1430	86.0	85.4	0.81	8.24	6.5	26.71	2.3	2.2	0.0131	45	56
5.5		**132 S4 A**	132 110-••A	1430	87.4	86.7	0.84	10.82	6.5	36.73	2.3	2.2	0.0267	60	59
7.5		**132 M4 A**	132 310-••A	1440	89.0	88.7	0.85	14.34	6.5	49.74	2.3	2.2	0.0343	73	59
11		**M3GP 160 MLC**	3GGP 162 430-••G	1470	91.3	91.3	0.82	22.5	7.7	71	3.1	3.6	0.09	166	65
15		**160 MLE**	162 450-••G	1467	92.0	92.0	0.83	30	7.6	98	3.1	3.6	0.121	189	67
18.5	**HO**	**160 MLF**	162 460-••G	1466	92.0	92.0	0.82	36.5	8.0	120	3.2	3.6	0.121	189	68
18.5		**180 MLA**	182 410-••G	1474	92.5	92.6	0.82	36	7.3	120	2.7	3.2	0.176	206	62
22		**180 MLB**	182 420-••G	1471	92.6	92.7	0.82	42	7.1	143	2.6	3.0	0.191	214	62
30 [2)]	**HO**	**180 MLC**	182 430-••G	1473	92.3	92.3	0.80	59	7.8	194	3.1	3.4	0.239	233	66
30		**200 MLB**	202 420-••G	1475	93.5	93.6	0.84	56	7.4	194	3.3	3.0	0.34	305	61
37	**HO**	**200 MLC**	202 430-••G	1475	93.3	93.3	0.82	70	7.5	239	3.5	3.2	0.34	305	73
37		**225 SMB**	222 220-••G	1480	93.6	93.4	0.84	69	7.7	239	3.1	3.1	0.42	355	67
45		**225 SMC**	222 230-••G	1477	94.4	94.4	0.86	81	7.4	291	3.1	3.0	0.49	390	67
55 [3)]	**HO**	**225 SMD**	222 240-••G	1476	94.0	93.9	0.85	100	7.6	356	3.3	3.1	0.49	390	74
55		**250 SMA**	252 210-••G	1479	94.6	94.7	0.83	101	6.9	355	2.5	3.1	0.72	415	66
75 [3)]	**HO**	**250 SMB**	252 220-••G	1476	94.7	94.9	0.86	133	7.2	485	2.7	3.2	0.88	470	73
75		**M2BA 280 SMA**	3GBA 282 210-••A	1484	95.0	95.0	0.86	135	6.9	483	2.6	2.8	1.25	590	68
90		**280 SMB**	282 220-••A	1483	95.2	95.2	0.87	158	7.2	580	2.6	2.7	1.5	630	68
110	**HO**	**280 SMC**	282 230-••A	1484	95.6	95.6	0.87	194	7.7	708	3.0	3.0	1.85	690	68
110		**315 SMA**	312 210-••A	1487	95.6	95.4	0.87	192	7.2	706	2.0	2.5	2.3	870	70
132		**315 SMB**	312 220-••A	1487	95.8	95.6	0.87	232	7.1	848	2.3	2.7	2.6	925	70
160		**315 SMC**	312 230-••A	1486	96.0	95.9	0.86	282	7.2	1028	2.4	2.9	2.9	970	70
200		**315 MLA**	312 410-••A	1486	96.2	96.2	0.86	351	7.2	1285	2.5	2.9	3.5	1080	70
250		**355 S**	352 100-••A	1487	96.5	96.4	0.87	430	7.2	1606	2.3	2.7	6.5	1550	80
315		**355 SMA**	352 210-••A	1488	96.7	96.6	0.87	545	7.6	2022	2.5	2.9	8.2	1800	80
355		**355 SMB**	352 220-••A	1486	96.7	96.7	0.87	610	6.8	2281	2.2	2.6	8.2	1800	80
400		**355 MLA**	352 410-••A	1489	96.8	96.8	0.87	685	6.9	2565	1.6	2.8	10	2100	80
450 [2)]		**355 MLB**	352 420-••A	1489	96.8	96.8	0.87	770	7.6	2886	1.5	3.0	10	2100	80
500		**355 MLC**	352 430-••A	1489	96.8	96.8	0.88	845	7.6	3207	1.3	2.9	10.5	2100	83
400		**400 M**	402 300-••A	1489	96.8	96.8	0.87	685	6.9	2565	1.6	2.8	10	2150	80
450 [2)]		**400 MA**	402 310-••A	1489	96.8	96.8	0.87	770	7.6	2886	1.5	3.0	10	2150	80
500		**400 MB**	402 320-••A	1489	96.8	96.8	0.88	845	7.6	3207	1.3	2.9	10.5	2150	83
560		**400 LKA**	402 510-••A	1489	96.9	96.9	0.90	925	6.6	3591	1.1	2.6	14	3050	85
630		**400 LKB**	402 520-••A	1489	96.9	96.8	0.87	1080	6.9	4040	1.2	2.8	15	3150	85

[1)] Motors are certified for the voltages 380-400-415 V 50 Hz according to IEC 34-1. Values above are given for 400 V 50 Hz; data for other voltages on request.
[2)] Temperature rise class F
[3)] for 400-415 V 50 Hz (380 V 50 Hz voltage code B or A)

Design HO = High-output design. The output of these motors is one step higher than the basic with rated outputs in accordance with CENELEC.

Please note that the frequency converter application in critical conditions may require special rotor design within 355 to 400 frame motors. We therefore recommend a separate checking.

Notes:
- When ordering sizes 160-200 with lifetime lubrication, variant code 195 'Bearings greased for life' has to be added.

Data for other voltages and frequencies, on request. 2- and 4-pole Cenelec motors size 160-250 can be used at ambient 50°C in temperature rise max. 75 K (cl. F); for more information contact us.

The two bullets in the product code indicate choice of mounting arrangement (see ordering information), voltage and frequency (below).

S	D	A [a)]	B [a)]	E	F [b)]	X
380 VY 50 Hz 400 VY 50 Hz 415 VY 50 Hz 220 VΔ 50 Hz 230 VΔ 50 Hz 440 VΔ 60 Hz	380 VΔ 50 Hz 400 VΔ 50 Hz 415 VΔ 50 Hz 660 VY 50 Hz 690 VY 50 Hz[c)] 440 VΔ 60 Hz	380 VY 50 Hz 220 VΔ 50 Hz	380 VΔ 50 Hz 660 VY 50 Hz	500 VΔ 50 Hz 575 VΔ 60 Hz	500 VY 50 Hz	Other rated voltage, connection or frequency, max. 690 V
		G [a)]	**H [a)]**	**T [b)]**	**U [b)c)]**	
		415 VY 50 Hz	415 VΔ 50 Hz	660 VΔ 50 Hz	690 VΔ 50 Hz	

[a)] On request for motor sizes 315-400. [b)] On request for motor sizes 355-400.
[c)] Motor sizes 80-250: Not permitted for Ex N acc. to BS 5000:16. Motor sizes 280-400 available on VTT certificate.

Technical data – Non-sparking motors

Cast iron frame, sizes 71 to 400

IP 55, IC 411; Insulation class F, temperature rise class B

Output kW	Design	Type designation	Product code	Speed r/min	Efficiency Full load 100%	Efficiency 3/4 load 75%	Power factor cos φ	Current I_N A	Current I_s/I_N	Torque T_N Nm	Torque T_s/T_N	Torque T_{max}/T_N	Moment of inertia J=1/4 GD² kgm²	Weight kg	Sound pressure level LP dB(A)
1000 r/min = 6 poles				**400 V 50 Hz 1)**											
0.18		**M2BA 71 M6 A**	3GBA 073 310-••A	880	57.0	55.7	0.63	0.73	4.0	1.95	1.7	1.8	0.0006	10	42
0.25		**71 M6 B**	073 320-••A	880	61.5	61.4	0.65	0.91	4.0	2.71	1.7	1.8	0.0007	11	42
0.37		**80 M6 A**	083 310-••A	920	68.0	63.7	0.65	1.21	5.0	3.84	1.7	1.8	0.0016	17	45
0.55		**80 M6 B**	083 320-••A	920	70.0	66.4	0.66	1.72	5.0	5.71	1.7	1.8	0.002	18	45
0.75		**90 S6 A**	093 110-••A	920	74.0	71.8	0.71	2.08	5.0	7.79	2.0	2.2	0.0029	21	48
1.1		**90 L6 A**	093 510-••A	920	75.0	73.8	0.73	2.9	5.0	11.42	2.0	2.2	0.0038	25	48
1.5		**100 L6 A**	103 510-••A	930	79.0	76.6	0.73	3.76	5.5	15.4	2.0	2.2	0.01	32	51
2.2		**112 M6 A**	113 310-••A	940	83.0	80.0	0.73	5.24	5.5	22.35	2.0	2.2	0.0156	40	54
3		**132 S6 A**	133 110-••A	960	84.5	84.5	0.77	6.67	6.5	29.84	2.0	2.2	0.0312	55	56
4		**132 M6 A**	133 310-••A	960	85.0	85.0	0.76	8.94	6.5	39.74	2.0	2.2	0.0407	65	56
5.5		**132 M6 B**	133 320-••A	950	87.0	87.0	0.78	11.7	6.5	55	2.0	2.2	0.0533	75	56
7.5		**M3GP 160 MLA**	3GGP 163 410-••G	965	88.6	89.3	0.80	15.5	6.5	74	1.9	3.0	0.088	160	57
11		**160 MLB**	163 420-••G	966	89.2	89.9	0.79	23	7.1	109	2.1	3.3	0.106	173	65
14	2)3) **HO**	**160 MLC**	163 430-••G	969	88.9	88.9	0.74	31	7.9	138	2.8	3.9	0.121	188	64
15		**180 MLB**	183 420-••G	970	90.7	91.0	0.79	31	6.6	148	1.6	2.8	0.221	233	67
18.5		**200 MLA**	203 410-••G	983	91.3	91.4	0.80	37	7.1	180	3.2	3.1	0.37	265	66
22		**200 MLB**	203 420-••G	983	91.6	91.6	0.81	43	7.5	214	3.2	3.2	0.43	285	61
30	**HO**	**200 MLC**	203 430-••G	983	91.6	91.5	0.80	60	7.5	292	3.5	3.4	0.49	305	65
30		**225 SMB**	223 220-••G	985	92.8	92.8	0.81	58	7.4	291	3.4	3.0	0.64	350	61
37	**HO**	**225 SMC**	223 230-••G	983	92.8	92.9	0.83	70	7.1	359	3.2	2.8	0.75	380	64
37		**250 SMA**	253 210-••G	987	93.4	93.4	0.81	71	7.2	358	3.2	2.9	1.16	420	66
45	**HO**	**250 SMB**	253 220-••G	987	93.6	93.6	0.82	84	7.5	435	3.2	2.8	1.49	465	66
45		**M2BA 280 SMA**	3GBA 283 210-••A	990	94.5	94.5	0.84	82	6.9	434	2.5	2.5	1.85	570	66
55		**280 SMB**	283 220-••A	990	94.7	94.7	0.84	101	7.0	531	2.7	2.6	2.2	610	66
75	**HO**	**280 SMC**	283 230-••A	990	95.2	95.2	0.84	137	7.3	723	2.9	2.8	2.85	690	66
75		**315 SMA**	313 210-••A	992	95.0	94.7	0.82	141	7.4	722	2.4	2.8	3.2	820	68
90		**315 SMB**	313 220-••A	992	95.5	95.3	0.84	163	7.5	866	2.4	2.8	4.1	910	68
110		**315 SMC**	313 230-••A	991	95.6	95.5	0.83	202	7.4	1060	2.5	2.9	4.9	980	68
132		**315 MLA**	313 410-••A	991	95.8	95.7	0.83	240	7.5	1272	2.7	3.0	5.8	1100	68
160		**355 S**	353 100-••A	992	95.9	95.7	0.85	280	6.8	1540	1.8	2.7	10.4	1550	75
200		**355 SMA**	353 210-••A	992	95.9	95.7	0.85	355	7.1	1925	2.0	2.7	12.5	1800	75
250		**355 SMB**	353 220-••A	992	96.0	95.8	0.84	450	7.5	2407	2.2	2.8	12.5	1800	75
315		**355 MLA**	353 410-••A	991	96.2	96.1	0.84	565	7.3	3036	2.0	3.0	14.6	2100	75
355		**355 MLC**	353 430-••A	991	96.4	96.3	0.84	635	7.6	3421	1.5	3.0	15.8	2100	78
250		**400 M**	403 300-••A	992	96.0	95.8	0.84	450	7.5	2407	2.2	2.8	12.5	2000	75
315		**400 MA**	403 310-••A	991	96.2	96.1	0.84	565	7.3	3036	2.0	3.0	14.6	2150	75
355		**400 MB**	403 320-••A	991	96.4	96.3	0.84	635	7.6	3421	1.5	3.0	15.8	2150	78
400		**400 LKA**	403 510-••A	992	96.5	96.4	0.85	700	6.4	3851	1.2	2.7	16.5	2800	80
450		**400 LKB**	403 520-••A	993	96.5	96.4	0.85	790	6.8	4328	1.3	2.8	19	3050	80
500	2)	**400 LKC**	403 530-••A	992	96.5	96.4	0.85	880	6.8	4813	1.3	2.8	19	3050	80

1) Motors are certified for the voltages 380-400-415 V 50 Hz according to IEC 34-1. Values above are given for 400 V 50 Hz; data for other voltages on request.
2) Temperature rise class F
3) Nominal power lower than CENELEC +1.

Design HO = High-output design. The output of these motors is one step higher than the basic with rated outputs in accordance with CENELEC.

Please note that the frequency converter application in critical conditions may require special rotor design within 355 to 400 frame motors. We therefore recommend a separate checking.

Notes:
- **When ordering sizes 160-200 with lifetime lubrication, variant code 195 'Bearings greased for life' has to be added.**

Data for other voltages and frequencies, on request.

Technical data – Non-sparking motors

Cast iron frame, sizes 71 to 400

IP 55, IC 411; Insulation class F, temperature rise class B

Output kW	Design	Type designation	Product code	Speed r/min	Efficiency Full load 100%	Efficiency 3/4 load 75%	Power factor cos φ	Current I_N A	Current $\frac{I_s}{I_N}$	Torque T_N Nm	Torque $\frac{T_s}{T_N}$	Torque $\frac{T_{max}}{T_N}$	Moment of inertia J=1/4 GD² kgm²	Weight kg	Sound pressure level LP dB(A)
750 r/min = 8 poles				**400 V 50 Hz**											
4		**M3GP 160 MLA**	3GGP 164 410-••G	717	83.0	83.1	0.70	10.1	5.2	53	1.8	2.8	0.071	146	59
5.5		**160 MLB**	164 420-••G	713	83.2	83.7	0.70	13.5	5.1	74	1.9	2.6	0.09	160	60
7.5		**160 MLC**	164 430-••G	714	85.5	86.1	0.70	18.4	5.7	100	1.8	2.9	0.121	188	60
11		**180 MLB**	184 420-••G	726	90.0	90.0	0.75	24	5.7	145	1.6	2.7	0.239	227	63
15		**200 MLA**	204 410-••G	735	90.2	90.2	0.78	31	7.2	195	2.5	3.3	0.45	280	64
18.5	**HO**	**200 MLB**	204 420-••G	734	90.2	90.3	0.79	37	7.2	241	2.4	3.2	0.54	300	64
18.5		**225 SMA**	224 210-••G	734	91.0	91.0	0.75	40	6.6	241	2.0	3.0	0.61	335	61
22		**225 SMB**	224 220-••G	733	91.2	91.4	0.78	46	6.2	287	1.9	2.7	0.68	350	61
30	**HO**	**225 SMC**	224 230-••G	733	91.1	91.3	0.76	62	6.5	391	2.0	3.0	0.75	375	65
30		**250 SMA**	254 210-••G	736	91.8	91.9	0.78	61	6.8	389	2.1	3.0	1.25	420	61
37	**HO**	**250 SMB**	254 220-••G	737	92.5	92.3	0.77	75	7.6	479	2.3	3.4	1.52	465	65
37		**M2BA 280 SMA**	3GBA 284 210-••A	741	93.5		0.78	74	7.3	477	1.8	3.0	1.85	570	65
45		**280 SMB**	284 220-••A	741	94.0	93.8	0.78	90	7.6	580	1.9	3.2	2.2	610	65
55	**HO**	**280 SMC**	284 230-••A	741	94.4	94.3	0.79	108	7.8	709	1.9	3.2	2.85	690	62
55		**315 SMA**	314 210-••A	740	94.1	94.0	0.81	104	7.1	710	1.6	2.7	3.2	820	62
75		**315 SMB**	314 220-••A	740	94.4	94.3	0.82	140	7.1	968	1.7	2.7	4.1	910	62
90		**315 SMC**	314 230-••A	740	94.8	94.7	0.82	167	7.4	1161	1.8	2.7	4.9	980	64
110		**315 MLA**	314 410-••A	740	95.1	95.1	0.83	202	7.3	1420	1.8	2.7	5.8	1100	72
132		**355 S**	354 100-••A	742	95.0	94.9	0.80	250	5.8	1699	1.5	2.3	10.4	1550	75
160		**355 SMA**	354 210-••A	742	95.2	95.1	0.80	305	6.3	2059	1.7	2.4	12.5	1800	75
200		**355 MLA**	354 410-••A	743	95.5	95.1	0.77	395	6.6	2571	1.8	2.7	14.6	2100	75
250		**355 MLC**	354 430-••A	744	95.7	95.4	0.80	470	6.6	3209	1.5	3.0	15.8	2100	75
200		**400 M**	404 300-••A	743	95.5	95.1	0.77	395	6.6	2571	1.8	2.7	14.6	2150	75
250		**400 MA**	404 310-••A	744	95.7	95.4	0.80	470	6.6	3209	1.5	3.0	15.8	2150	75
315		**400 LKA**	404 510-••A	744	96.0	95.9	0.79	605	6.3	4043	1.4	2.6	16.5	2800	80
355		**400 LKB**	404 520-••A	744	96.2	96.0	0.79	680	6.6	4557	1.5	2.7	19	3050	80

1) Motors are certified for the voltages 380-400-415 V 50 Hz according to IEC 34-1. Values above are given for 400 V 50 Hz; data for other voltages on request.

2) Temperature rise class F

Design HO = High-output design. The output of these motors is one step higher than the basic with rated outputs in accordance with CENELEC.

Please note that the frequency converter application in critical conditions may require special rotor design within 355 to 400 frame motors. We therefore recommend a separate checking.

Notes:
- **When ordering sizes 160-200 with lifetime lubrication, variant code 195 'Bearings greased for life' has to be added.**

Data for other voltages and frequencies, on request.

The two bullets in the product code indicate choice of mounting arrangement (see ordering information), voltage and frequency (below).

S	D	A [a)]	B [a)]	E	F [b)]	X
380 VY 50 Hz 400 VY 50 Hz 415 VY 50 Hz 220 VΔ 50 Hz 230 VΔ 50 Hz 440 VΔ 60 Hz	380 VΔ 50 Hz 400 VΔ 50 Hz 415 VΔ 50 Hz 660 VY 50 Hz 690 VY 50 Hz [c)] 440 VΔ 60 Hz	380 VY 50 Hz 220 VΔ 50 Hz	380 VΔ 50 Hz 660 VY 50 Hz	500 VΔ 50 Hz 575 VΔ 60 Hz	500 VY 50 Hz	Other rated voltage, connection or frequency, max. 690 V
		G [a)]	**H [a)]**	**T [b)]**	**U [b)c)]**	
		415 VY 50 Hz	415 VΔ 50 Hz	660 VΔ 50 Hz	690 VΔ 50 Hz	

[a)] On request for motor sizes 315-400. [b)] On request for motor sizes 355-400.
[c)] Motor sizes 80-250: Not permitted for Ex N acc. to BS 5000:16. Motor sizes 280-400 available on VTT certificate.

Rating plates

For motor sizes 63 to 132 the rating plate gives one current value for the voltage area. That is the highest current that can occur within the voltage area with the given output.

For motor sizes 160 to 400 the rating plate is in table form giving values for speed, current and power factor for six voltages.

European standards require a special marking on safety motors. The marking shall include the following:
- type of protection
- apparatus group
- temperature class
- name of certifying body
- certificate number

M2AA 63-100

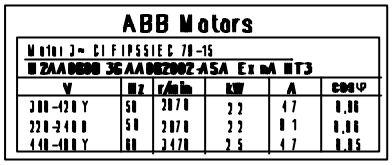

M2AA 112-132

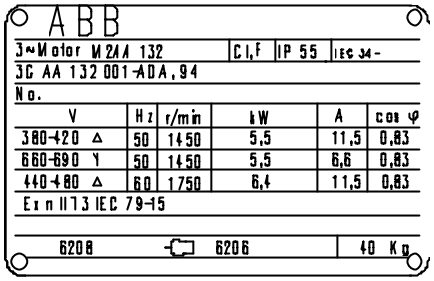

M2AA 160-250

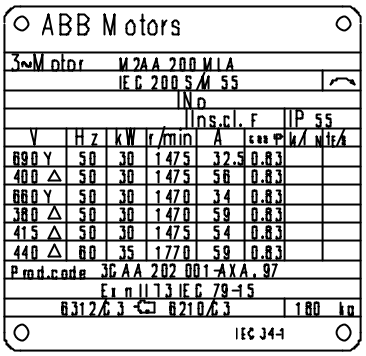

M2BA 71-132

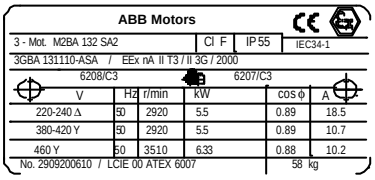

M2BA 160-400

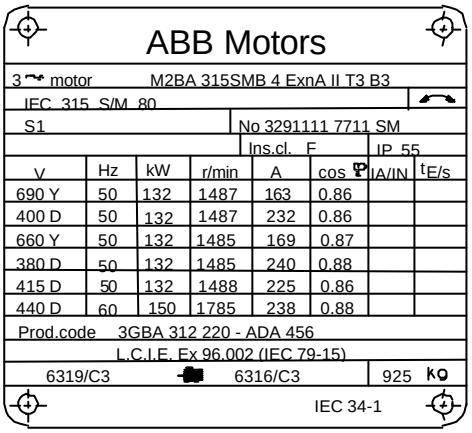

Variant codes - Non-sparking motors

Variant codes / Non-sparking motors		Aluminium motors				Cast iron motors			
Code [1]	Variant	63-100	112-132	160-180	200-250	71-132	160-250	280-315	355-400
Balancing									
052	Balancing to grade R (ISO 2373).	T	T	T	T	T	T	T	T
417	Balancing to grade S (ISO 2373).	–	T	R	R	T	T	T	T
424	Full key balancing.	T	T	T	T	T	T	T	T
Bearings and lubrication									
036	Transport lock for bearings.	–	L	L	L	–	T	L	L
037	Roller bearing at D-end.	–	–	L	L	–	L	L	L
039	Cold resistant grease (-55...+100°C).	L	L	L	L	L	L	L	L
040	Heat resistant grease (-25...+150°C). Aluminium motors sizes 63-100: -40...+160°C.	S	L	L	L	L	S	S	S
041	Bearings regreasable via grease nipples.	–	L	L	S	–	S	S	S
194	2Z-bearings at both ends. Cast iron motor sizes 160-250 available as stocked option with lifetime bearings.	S	S	S	R	S	T	R	–
195	Bearings greased for life. Cast iron motor sizes 160-250 available as stocked option with lifetime bearings.	S	S	S	R	S	T	R	–
042	Internal bearing cover, locked D-end. Standard for sizes M2AA 90-100 and flange-mounted M2AA 112-132, M2BA 160-180.	L	L	S	L	R	S	S	S
043	SPM-nipples.	–	L	L	L	–	S	L	S
058	Angular contact bearing at D-end, shaft force away from bearing	–	L	–	–	–	T	L	L
059	Angular contact bearing at N-end, shaft force towards bearing.	–	L	L	L	–	R	–	–
107	Bearing mounted PT100 resistance elements.	–	–	–	–	–	T	T	T
188	63-series bearings at D-end. Aluminium motors sizes 90-100 = S	–	L	L	S	–	S	S	S
433	Grease relief. Flange-mounted cast iron motor sizes 160-180 not possible.	–	–	–	–	R	R	–	–
Branch standard designs									
178	Stainless steel/acid proof bolts.	L	L	L	L	L	L	T	T
411	Increased efficiency design.	–	–	–	–	R	R	T	T
415	Smoke venting design (short time duty in high amb.temperature).	–	R	R	R	R	R	R	R
170	Smoke venting specification 200°C, 2 hours.	R	R	R	R	–	–	R	R
171	Smoke venting specification 300°C, 0.5 hours.	R	R	R	R	R	R	R	R
172	Smoke venting specification 300°C, 1 hour.	–	R	R	R	R	R	R	R
425	Corrosion protected stator and rotor core.	R	–	–	–	–	–	T	T
432	Copper bar rotor.	–	–	–	–	–	–	T	T
Cooling system									
053	Metal fan cover.	L	L	S	S	S	S	S	S
068	Metal fan.	L	L	L	L	R	L	L	L
490	Plastic fan with metal hub.	–	–	–	–	–	–	L	L
075	Cooling method IC 418 (without fan).	-	R	R	R	R	R	T	T
183	Separate motor cooling (fan axial, N-end).	R	T	L	L	R	R	T	T
422	Separate motor cooling (fan top or side, N-end).	–	–	–	–	–	–	T	T
791	Stainless steel fan cover.	–	–	–	–	–	R	R	R
Coupling									
035	Assembly of customer supplied coupling-half.	–	–	–	–	R	R	L	L

[1] = Certain variant codes cannot be used together
R = On request
S = Included as standard
L = Modification of stocked motor or during new production
T = With new production only

Variant codes / Non-sparking motors		Aluminium motors				Cast iron motors			
Code [1]	Variant	63-100	112-132	160-180	200-250	71-132	160-250	280-315	355-400
Drain holes									
065	Plugged drain holes.	-	S	S	S	L	L	L	L
066	Modified drain hole position (for specified IM xxxx).	L	–	–	–	L	L	L	L
076	Draining holes with plugs.	L	–	–	–	L	S	S	S
Earthing bolt									
067	External earthing bolt.	L	S	S	S	S	S	S	S
Hazardous environments									
094	Ex nA design acc. to IEC 79-15, Ex N acc. to BS 5000/16.	–	L	L	L	–	–	–	–
452	DIP according to EN 50 281-1-1, T = 125°C, category 3 D, IP 55 (for zone 22)	–	–	–	–	R	R	R	R
453	DIP according to EN 50 281-1-1, T = 125°C, category 2 D, IP 65 (for zone 21)	–	–	–	–	R	R	R	R
407	Ex N design, fulfilling BS5000/16, certificate provided.	–	–	–	–	–	–	T	T
455	Ex N design, fulfilling BS5000/16, without certificate.	L	–	–	–	–	–	–	–
456	Ex nA design, fulfilling IEC 79-15, certificate provided.	–	–	–	–	L	S	T	T
457	Ex nA design, fulfilling IEC 79-15, without certificate.	L	–	–	–	–	–	T	T
480	EEx nA fulfilling EN 50021.	–	–	–	–	L	L	–	–
Heating elements									
450	Heating element, 110-120 V.	–	R	R	R	T	T	T	T
451	Heating element, 220-240 V.	–	R	R	R	T	T	L	L
Insulation system									
014	Winding insulation class H.	–	R	R	R	–	–	T	T
405	Special winding insulation for frequency converter supply.	–	R	R	R	–	–	T	T
406	Winding for supply > 690 ≤ 1000 Volts.	–	–	–	R	–	–	R	R
Marine motors									
	See catalogue 'Marine Motors, BA/Marine GB', for details.								
Mounting arrangements									
008	IM 2101 foot/flange mounted, IEC flange, from IM 1001 (B34 from B3).	L	L	–	–	L	–	–	–
009	IM 2001 foot/flange mounted, IEC flange, from IM 1001 (B35 from B3).	L	L	L	L	L	L	L	L
047	IM 3601 flange mounted, IEC flange, from IM 3001 (B14 from B5), flange mounted with large flange. Small flange with tapped holes.	L	L	–	–	L	–	–	–
048	IM 3001 flange mounted, IEC flange, from IM 3601 (B5 from B14), flange mounted with small flange. Large flange with clearance holes.	L	–	–	–	L	–	–	–
078	(IM 3601) flange mounted, DIN C-flange. Small flange with tapped holes. Larger flange than standard version.	L	–	–	–	–	–	–	–
080	(IM 3001) flange mounted, DIN A-flange. Large flange with clearance holes. Larger flange than standard version.	L	–	–	–	–	–	–	–
090	(IM 2101) foot/flange mounted, DIN C-flange, from IM 1001 (B34 from B3). Small flange with tapped holes. Larger flange than standard version.	L	–	–	–	–	–	–	–
091	(IM 2001) foot/flange mounted, DIN A-flange, from IM 1001 (B35 from B3). Large flange with clearance holes. Larger flange than standard version.	L	–	–	–	–	–	–	–
Painting									
114	Special paint colour, standard grade.	L	L	L	L	L	L	L	L
115	Offshore, zinc primer painting.	R	R	R	R	R	T	T	T
179	Special paint specification.	R	R	R	R	R	R	R	R

[1] = Certain variant codes cannot be used together
R = On request
S = Included as standard
L = Modification of stocked motor or during new production
T = With new production only

Variant codes / Non-sparking motors		Aluminium motors				Cast iron motors			
Code [1]	Variant	63-100	112-132	160-180	200-250	71-132	160-250	280-315	355-400
Protection									
072	Radial seal at D-end.	–	L	L	L	R	L	L	L
073	Sealed against oil at D-end.	T	–	–	–	R	T	T	T
005	Protective roof, vertical motor, shaft down.	L	L	L	L	L	L	L	L
401	Protective roof, horizontal motor.	–	–	–	–	R	T	T	T
403	Degree of protection IP 56.	–	L	L	L	T	T	L	L
404	Degree of protection IP 56, without fan.	–	–	–	–	R	T	T	T
783	Labyrinth sealing at D-end.	–	–	–	–	R	T	T	T
Rating & instruction plates									
002	Restamping voltage, frequency and output, continuous duty.	L	L	L	L	L	T	L	L
013	Restamping to output for class F temperature rise.	R	R	R	R	–	–	L	L
095	Restamping output (maintained voltage, frequency), frequency), intermittent duty.	L	L	L	L	–	–	L	L
138	Mounting of additional identification plate.	L	L	L	L	L	L	L	L
150	Instruction plates and maintenance instructions in non-standard language.	R	R	R	R	R	R	R	R
161	Additional rating plate delivered loose.	L	R	R	R	L	L	L	L
Shaft & rotor									
069	Two shaft extensions as per basic catalogue.	T	T	T	T	T	T	T	T
070	One or two special shaft extensions, standard shaft material.	T	T	T	T	R	T	T	T
155	Cylindrical shaft extension, D-end, without key-way.	T	–	–	–	R	T	T	T
156	Cylindrical shaft extension, N-end, without key-way.	T	–	–	–	R	T	T	T
166	One special shaft extension, standard shaft material, configured according to eCommerce rules.					–	–	–	–
410	Stainless/acid-proof steel shaft (standard or non-standard design.	T	T	T	T	R	T	T	T
431	Special shaft material for low temperatures, < -40°C	–	–	–	–	T	T	T	T
Standards and regulations									
152	Classified shaft material.	–	–	–	–	T	T	T	T
153	Reduced test for classification society.	–	–	–	–	T	R	L	L
421	VIK design (Verband der industriellen Energie- und Kraftwirtschaft e.V.).	–	–	–	–	L	L	T	T
773	EEMUA (No 132 1988) design.	–	–	–	–	R	R	T	T
774	NORSOK (North Sea Territorial Waters) design.	–	–	–	–	R	R	T	T
775	SHELL DEP 33.66.05.31-Gen. January 1999 design.	–	–	–	–	L	L	T	T
Stator winding temperature sensors									
435	PTC - thermistors (3 in series), 130°C, in stator winding.	T	R	R	R	T	T	L	L
436	PTC - thermistors (3 in series), 150°C, in stator winding.	T	R	R	S	T	S	S	S
439	PTC - thermistors (2x3 in series), 150°C, in stator winding.	R	R	R	R	T	T	L	L
441	PTC - thermistors (3 in series 130°C & 3 in series 150°C), in stator winding.	R	R	R	R	T	T	L	L
442	PTC - thermistors (3 in series 150°C & 3 in series 170°C), in stator winding.	R	R	R	R	–	–	L	L
445	PT100 resistance element (1 per phase) in stator winding.	–	–	R	R	–	T	L	L
445	PT100 resistance element (2 per phase) in stator winding.	–	R	R	R	–	T	L	L
Terminal box									
015	Δ connection in terminal box (reconnection from Y).	L	L	L	L	L	L	L	L
017	Y connection in terminal box (reconnection from Δ).	L	L	L	L	L	L	L	L

[1] = Certain variant codes cannot be used together
R = On request
S = Included as standard
L = Modification of stocked motor or during new production
T = With new production only

Variant codes / Non-sparking motors		Aluminium motors				Cast iron motors			
Code [1]	Variant	63-100	112-132	160-180	200-250	71-132	160-250	280-315	355-400
157	Terminal box degree of protection IP 65.	–	–	–	–	L	L	L	L
230	Standard cable glands.	L	–	–	–	L	S	S	S
231	Standard cable glands with clamping device.	–	–	–	–	L	T	T	T
400	4 x 90 degr turnable terminal box. Cast iron sizes 200-250 = S	–	–	–	–	–	L	T	T
402	Terminal box adapted for Al cables.	–	–	–	R	R	–	S	S
413	Extended cable connection, no terminal box.	R	–	–	–	R	R	T	T
414	Smaller than standard terminal box.	–	–	–	–	–	–	R	R
418	Separate terminal box for temperature detectors.	–	R	R	R	–	L	L	L
466	Terminal box at N-end.	–	–	–	–	–	T	T	T
467	Lower than standard terminal box and rubber extended cable.	–	–	–	–	–	–	R	R
468	Non-standard cable entry direction (state cable direction).	–	–	–	–	L	T	T	T
469	Axial cable entry direction.	–	–	–	–	L	T	T	T
731	Non-standard cable glands.	–	–	–	–	R	L	L	L
741	Motor equipped with EEx e terminal box (EN 50019.	–	–	–	–	–	T	T	T
Testing									
145	Type test report from test of identical motor.	R	L	L	L	L	L	L	L
146	Type test with report for motor from specific delivery batch.	T	L	L	L	L	L	L	L
147	Type test with report for motor from specific delivery batch, customer witnessed.	T	L	L	L	L	L	L	L
148	Routine test report.	R	L	L	L	L	L	L	L
149	Testing according to separate test specification.	R	L	L	L	L	L	L	L
760	Vibration level test.	–	R	R	R	L	L	L	L
761	Vibration spectrum test.	–	R	R	R	–	L	L	L
762	Noise level test.	–	R	R	R	L	L	L	L
763	Noise spectrum test.	–	R	R	R	L	L	L	L
764	Complete test with ABB frequency converter.	–	R	R	R	R	R	L	L
768	Chog type test with report for motor from specific delivery batch.	–	–	–	–	R	T	R	R
769	Chog type test report from test of identical motor.	–	–	–	–	R	T	R	R
Variable speed drives									
181	Adapted for frequency converter, variable speed operation.	R	R	R	R	R	R	R	R
701	Insulated bearing at N-end. Note: In variable speed drives all Ex-motors size 280 and above must be equipped with insulated bearings (see p 110).	–	–	–	–	–	–	T	T
704	EMC cable gland.	–	R	R	R	–	–	T	T
Separate cooling									
183	Separate motor cooling (fan axial, N-end).	R	T	L	L	–	T	T	T
422	Separate motor cooling (fan top or side, N-end).	–	–	–	–	–	–	T	T
Tacho									
182	Pulse sensor mounted as specified (Leine&Linde equivalent), hollow-shaft type). Assembly of customer supplied tacho.	R	R	R	R	–	T	T	T
470	Prepared for hollow-shaft pulse tacho (Leine&Linde equivalent).	T	T	T	L	–	T	T	T
479	Mounting of other type of pulse tacho with shaft extension.	R	–	–	–	–	T	T	T
062	Tachogenerator mounted.	–	–	–	–	–	T	T	T
471	512 pulse tacho (Leine & Linde equivalent) mounted.	R	R	R	R	–	T	T	T
472	1024 pulse tacho (Leine & Linde equivalent) mounted.	R	R	R	R	–	T	T	T
473	2048 pulse tacho (Leine & Linde equivalent) mounted.	R	R	R	R	–	T	T	T
748	Pulse tacho Lake Shore RIM 8500 mounted.	–	–	–	–	–	R	R	R
749	Pulse tacho Avtron M285 mounted.	–	–	–	–	–	R	R	R

[1] = Certain variant codes cannot be used together
R = On request
S = Included as standard
L = Modification of stocked motor or during new production
T = With new production only

Variant codes / Non-sparking motors		Aluminium motors				Cast iron motors			
Code [1]	Variant	63-100	112-132	160-180	200-250	71-132	160-250	280-315	355-400
Separate motor cooling & tacho									
478	Separate motor cooling (fan top, N-end) and prepared fo hollow shaft pulse tacho (Leine & Linde equivalent).	–	–	–	–	–	–	T	T
486	Separate motor cooling (fan top, N-end) and prepared fo DC-tacho.	–	–	–	–	–	–	T	T
428	Separate motor cooling (fan top, N-end) and Leine & Linde, type 510 006361, pulse tacho mounted.	–	–	–	–	–	–	T	T
429	Separate motor cooling (fan top, N-end) and Leine & Linde, type EEx e 840, pulse tacho mounted.	–	–	–	–	–	–	T	T
474	Separate motor cooling (fan axial, N-end) and prepared for hollow shaft pulse tacho (Leine & Linde equivalent).	–	R	R	R	–	T	T	T
487	Separate motor cooling (fan axial, N-end) and prepared for hollow shaft pulse tacho (Lake Shore RIM8500 or Avtron M285).	–	R	R	R	–	R	T	T
475	Separate motor cooling (fan axial, N-end) and 512 pulse tacho (Leine & Linde equivalent) mounted.	–	R	R	R	–	T	T	T
476	Separate motor cooling (fan axial, N-end) and 1024 pulse tacho (Leine & Linde type EEx e 840 mounted.	–	R	R	R	–	T	T	T
477	Separate motor cooling (fan axial, N-end) and 2048 pulse tacho (Leine & Linde type EEx e 840) mounted.	–	R	R	R	–	T	T	T
488	Separate motor cooling (fan axial, N-end) and Lake Shore RIM8500 pulse tacho mounted.	–	R	R	R	–	R	R	R
489	Separate motor cooling (fan axial, N-end) and Avtron M285 pulse tacho mounted.	–	R	R	R	–	R	R	R
Y/Δ-starting									
117	Terminals for Y/Δ start at both speeds (two-speed windings).	–	–	T	T	–	–	T	T
118	Terminals for Y/Δ start at high speed (two-speed windings).	–	T	–	–	–	–	T	T
119	Terminals for Y/Δ start at low speed (two-speed windings).	–	–	–	–	–	–	T	T

Dimension drawings

M3000 Non-sparking motors, aluminium frame

Foot-mounted motor IM 1001, IM B3

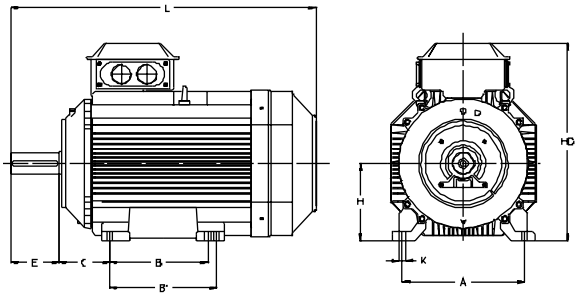

Flange-mounted motor IM 3001, IM B5

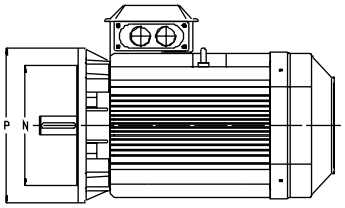

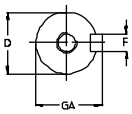

Shaft extension

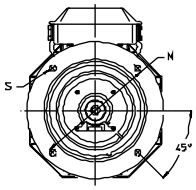

Sizes 63-200

Flanges

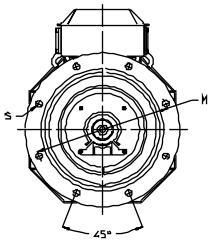

Sizes 225-250

	IM 1001, IM B3 AND IM 3001, IM B5										IM 1001, IM B3							IM 3001, IM B5			
Motor size	D poles		GA poles		F poles		E poles		L max poles		A	B	B'	C	HD	K	H	M	N	P	S
	2	4-8	2	4-8	2	4-8	2	4-8	2	4-8											
63	14	14	16	16	5	5	30	30	213	213	100	80	–	40	150	7	63	130	110	160	10
71	14	14	16	16	5	5	30	30	239	239	112	90	–	45	172	7	71	130	110	160	10
80	19	19	21.5	21.5	6	6	40	40	272	272	125	100	–	50	192	10	80	165	130	200	12
90 S	24	24	27	27	8	8	50	50	295	295	140	100	–	56	212	10	90	165	130	200	12
90 L	24	24	27	27	8	8	50	50	320	320	140	125	–	56	212	10	90	165	130	200	12
100 L	28	28	31	31	8	8	60	60	358.5	358.5	160	140	–	63	236	12	100	215	180	250	15
112 M	28	28	31	8	8	8	60	60	361	361	190	140	–	70	258	12	112	215	180	250	14.5
132	38	41	41	41	10	10	80	80	447	447	216	140	178	89	295.5	12	132	265	230	300	14.5
160 M	42	42	45	45	12	12	110	110	602.5	602.5	254	210	254	108	368.5	15	160	300	250	350	19
160 L	42	42	45	45	12	12	110	110	643.5	643.5	254	210	254	108	368.5	15	160	300	250	350	19
180 M	48	51.5	51.5	51.5	14	14	110	110	680	680	279	241	279	121	403.5	15	180	300	250	350	19
180 L	48	51.5	51.5	51.5	14	14	110	110	700.5	700.5	279	241	279	121	403.5	15	180	300	250	350	19
200 ML	55	55	59	59	16	16	110	110	773	773	318	267	305	133	496.5	18	200	350	300	400	19
225 SM	55	60	59	64	16	18	110	110	835	865	356	286	311	149	542	18	225	400	350	450	19
250 SM	60	65	64	69	18	18	140	140	872	872	406	311	349	168	590	22	250	500	450	550	19

IM 3601, IM B14

Motor size	HB	LA	M	P	S	T
63	258	120	100	80	M8	S
71	260	140	115	95	M8	R
80	229	160	130	110	M8	R
90	236	200	165	130	M10	N
100	246	250	215	180	M12	N
112	256	300	265	230	M12	N

Tolerances:

A, B	± 0,8
D, DA	ISO k6 < Ø 50mm ISO m6 > Ø 50mm
F, FA	ISO h9
H	+0 -0.5
N	ISO j6
C, CA	± 0.8

Above table gives the main dimensions in mm.

For detailed drawings please our web-pages 'www.abb.com/motors&drives' or contact ABB Motors.

Dimension drawings

M3000 Non-sparking motors, cast iron frame

Foot-mounted motor IM 1001, IM B3 Flange-mounted motor IM 3001, IM B5

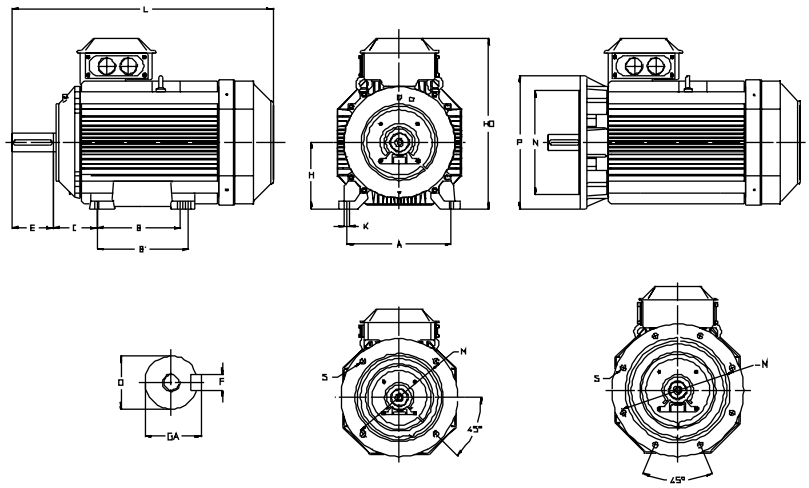

Sizes 71-200 Sizes 225-400

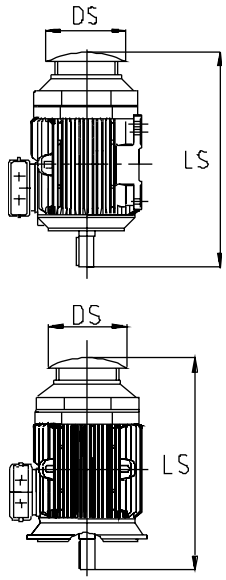

Protective roof, variant code 005

	IM 1001, IM B3 AND IM 3001, IM B5										IM 1001, IM B3							IM 3001, IM B5				Protective roof		
	D poles		GA poles		F poles		E poles		L max poles		A	B	B'	C	HD	K	H	M	N	P	S	DS	LS poles	
Motor size	2	4-8	2	4-8	2	4-8	2	4-8	2	4-8													2	4-8
71	14	14	16	16	5	5	30	30	250	250	112	90	–	45	190	7	71	130	110	160	10	140	275	275
80	19	19	21.5	21.5	6	6	40	40	282	282	125	100	–	50	220	10	80	165	130	200	12	155	320	320
90 S	24	24	27	27	8	8	50	50	310	310	140	100	–	56	235	10	90	165	130	200	12	175	345	345
90 L	24	24	27	27	8	8	50	50	335	335	140	125	–	56	235	10	90	165	130	200	12	175	370	370
100	28	28	31	31	8	8	60	60	380	380	160	140	–	63	270	12	100	215	180	250	15	195	410	410
112	28	28	31	31	8	8	60	60	395	395	190	140	–	70	290	12	112	215	180	250	15	220	425	425
132 S	38	38	41	41	10	10	80	80	462	462	216	140	–	89	330	12	132	265	230	300	15	260	490	490
132 M	38	38	41	41	10	10	80	80	500	500	216	178	–	89	330	12	132	265	230	300	15	260	530	530
160	42	42	45	45	12	12	110	110	711	711	254	210	254	108	388	14.5	160	300	250	350	18.5	328	756	756
180	48	48	51.5	51.5	14	14	110	110	706	706	279	241	279	121	426	14.5	180	300	250	350	18.5	359	756	756
200	55	55	59	59	16	16	110	110	774	774	318	267	305	133	536	18.5	200	350	300	400	18.5	414	844	844
225	55	60	59	64	16	18	110	140	841	871	356	286	311	149	583	18.5	225	400	350	450	18.5	462	921	951
250	60	65	64	69	18	18	140	140	875	875	406	311	349	168	646	24	250	500	450	550	18.5	506	965	965
280 SM	65	75	69	79.5	18	20	140	140	1088	1088	457	368	419	190	745	24	280	500	450	550	18	555	1190	1190
315 SM	65	80	69	85	18	22	140	170	1173	1203	508	406	457	216	840	30	315	600	550	660	23	624	1290	1320
315 ML	65	90	69	95	18	25	140	170	1224	1254	508	457	508	216	840	30	315	600	550	660	23	625	1341	1371
355 S	70	100	74.5	106	20	28	140	210	1344	1414	610	500	–	254	955	35	355	740	680	800	23	720	1476	1546
355 SM	70	100	74.5	106	20	28	140	210	1396	1466	610	500	560	254	955	35	355	740	680	800	23	720	1528	1703
355 ML	70	100	74.5	106	20	28	140	210	1501	1571	610	560	630	254	955	35	355	740	680	800	23	720	1633	1703
400 M	70	100	74.5	106	20	28	140	210	1501	1571	686	630	–	280	1005	35	400	–	–	–	–	810	1860	1900
400 LK	80	100	85.0	106	22	28	170	210	1708	1748	686	710	800	280	1040	35	400	740	680	800	23	810	1860	1900

IM 3601, IM B14

Motor size	Flange size	P	M	N	S	T
71	C105	105	85	70	M6	2.5
71	C140	140	115	95	M8	3
80	C120	120	100	80	M6	3
80	C160	160	130	110	M8	3.5
90	C140	140	115	95	M8	3
90	C160	160	130	110	M8	3.5
100, 112	C160	160	130	110	M8	3.5
100, 112	C200	200	165	130	M10	3.5

Tolerances:

A, B	± 0,8	**H**	+0 -0.5
D, DA	ISO k6 < Ø 50mm	**N**	ISO j6
	ISO m6 > Ø 50mm	**C, CA**	± 0.8
F, FA	ISO h9		

Above table gives the main dimensions in mm.

For detailed drawings please our web-pages 'www.abb.com/motors&drives' or contact ABB Motors.

Dimension drawings

Cast iron frame

Terminal boxes, standard design with 6 terminals

Motor sizes 71 - 132 [1)]

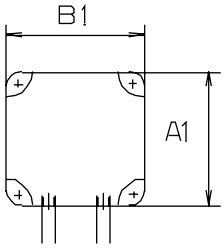

Motor sizes 160 - 250 [1)]

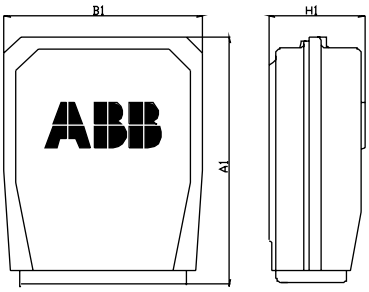

Motor sizes 280 - 400:

Top-mounted terminal box:

122/2
142/1, 142/2

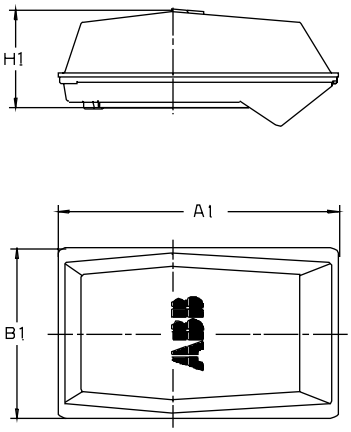

162/1, 162/2 +
adaptor MPMM-ZL1

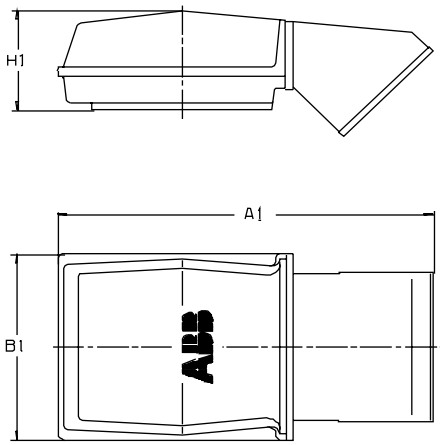

Side-mounted terminal box [1)]:

122/7
142/5, 142/10
162/5, 162/8

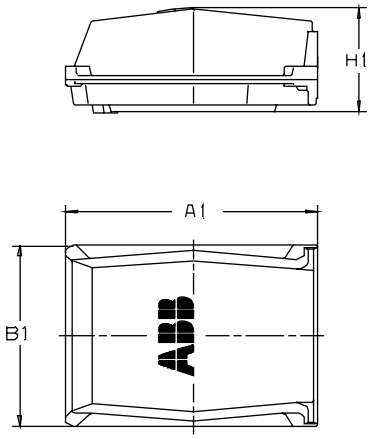

Motor size	A1	B1	H1
71 - 90	120	110	
100 - 132	135	120	
160 - 180	234	234	51.5
200 - 250	352	319	147

Terminal box type	**Motor size**	A1	B1	H1
Top-mounted terminal box:				
122/2	**280**	455	280	177
142/1, 142/2	**315 - 400M**	536	349	197
162/1, 162/2 +	**355 - 400**	787	410	226
Adapter MPMM-ZL1				
Side-mounted terminal box:				
122/7	**280**	383	280	180
142/5, 142/10	**315 - 400M**	426	347	201
162/5, 162/8	**355 - 400**	508	412	226

For motor dimensions please see dimension drawings on earlier pages.

Non-sparking motors with aluminium frame in brief, basic design

Motor size		63	71	80	90	100
Stator	Material Surface treatment	Die-cast aluminium alloy. Feet integrated with stator. One-component modified polyester paint. Munsell blue 8B 4.5/3.25 / NCS 4822-B05G. ≥ 30 µm.				
Feet	Material	Aluminium alloy. Integrated with the stator.				
Bearing end shields	Material Surface treatment	Die-cast aluminium alloy. One-component modified polyester paint. Munsell blue 8B 4.5/3.25 / NCS 4822-B05G. ≥ 30 µm.				
Bearings **Single-speed motors**	D-end N-end	6202-2Z/C3 6202-2Z/C3	6203-2Z/C3 6202-2Z/C3	6204-2Z/C3 6203-2Z/C3	6305-2Z/C3 6204-2Z/C3	6306-2Z/C3 6205-2Z/C3
Axially-locked bearings	Inner bearing cover	1)	1)	1)	D-end	D-end
		1) Foot-mounted motor. A spring washer at N-end presses the rotor against D-end.				
Bearing seal	D-end N-end	V-ring. Labyrinth seal.				
Lubrication		Permanently lubricated bearings. Grease for bearing temperatures -40 to +160°C.				
Terminal box	Material Surface treatment Screws	Die-cast aluminium alloy. Similar to stator. Steel 5G. Galvanised and yellow chromated.				
Connections	Knock-out openings	4 x M16 4 x Pg 11	4 x M20 4 x Pg 16			
	Terminal box Max Cu-area, mm^2	Screw terminal. 6 terminals. 2.5				
Fan	Material	Polypropylene. Reinforced with 20% glass fibre.				
Fan cover	Material	Polypropylene.				
Stator winding	Material Impregnation Insulation class Winding protection	Copper Polyester vanish. Tropicalised. Insulation class F. Temperature rise class B, unless otherwise stated. On request, see variant codes.				
Rotor winding	Material	Die-cast aluminium.				
Balancing method		Half key balancing				
Key ways		Closed key way				
Enclosure		IP 55				
Cooling method		IC 411				
Drain holes		As standard without drawing holes, available on request, see variant codes.				

Non-sparking motors with aluminium frame in brief, basic design

Motor size		112	132	160	180	200	225	250
Stator	Material Surface treatment	Die-cast aluminium alloy. Polyester powder paint. Munsell blue 8B 4.5/3.25 / NCS 4822-B05G. ≥ 50 µm.				Extruded aluminium alloy.		
Feet	Material	Aluminium alloy. Integrated with the stator.				Aluminium alloy, bolted to the stator.		250-2, cast iron
Bearing end shields	Material Surface treatment	Die-cast aluminium alloy. Two-component oxyranester paint, Munsell blue 8B 4.5/3.25 / NCS 4822-B05G. ≥ 50 µm.			Flanged bearing end shields of cast iron, other die-cast aluminium alloy			
Bearings **Single-speed motors**	D-end N-end	6206-2Z/C3 6205-2Z/C3	6208-2Z/C3 6206-2Z/C3	6309-2Z/C3 6209-2Z/C3	6310-2Z/C3 6209-2Z/C3	6312/C3 6210/C3	6313/C3 6212/C3	6315/C3 6213/C3
Axially-locked bearings	Inner bearing cover	D-end[1)] [1)] Foot-mounted motor. A spring washer at N-end presses the rotor against D-end. Flange-mounted motors: Inner bearing cover and spring-washer at the N-end.	D-end[1)]	D-end	D-end	D-end	D-end	D-end
Bearing seal	D-end N-end	V-ring. Two-speed 112, 132 M, V-ring. Other labyrinth seal.				Outer and inner V-rings. Outer and inner V-rings.		
Lubrication		Permanently lubricated bearings. Grease for bearing temperatures -25 to +125°C.				Valve lubrication. Grease for bearing temper. -25 to +125°C.		
Terminal box	Material Surface treatment Screws	Die-cast aluminium alloy. Base integrated with stator. Similar to stator. Steel 5G. Galvanised and chromated.				Deep-drawn steel sheet, bolted to stator. Phosphated. Polyester paint.		
Connections	Knock-out openings	M25 + M20 2 x (Pg 21 + Pg 16)		2 x M40 + M20 4 x Pg 29 + Pg 11		2 x M63 + M12		
	Flange-openings					2 x FL 13.2 x Pr 37 2 x Pg 29		
	Flange-openings for voltage code S					2 x FL 21.2 x Pr 54 2 x Pg 42		
	Terminal box	Cable lugs. 6 terminals.						
	Max Cu-area, mm^2	M5 10	M5 10	M6 35	M6 35	M10 70	M10 70	M10 70
Fan	Material	Polypropylene. Reinforced with 20% glass fibre.						
Fan cover	Material Surface treatment	Polypropylene. See also note		Steel sheet. [1)] [1)] Phosphated. Polyester paint. [1)]			[1)] Also two-speed sizes 112, 132 M.	
Stator winding	Material Impregnation Insulation class Winding protection	Copper Polyester vanish. Tropicalised. Insulation class F. Temperature rise class B, unless otherwise stated. On request, see variant codes				PTC-thermistors, 150°C		
Rotor winding	Material	Die-cast aluminium.						
Balancing method		Half key balancing as standard.						
Key way		Closed key way						
Enclosure		IP 55						
Cooling method		IC 411						
Drain holes		Drain holes with closable plastic plugs. Open on delivery.						

Non-sparking motors with cast iron frame in brief, basic design

Motor size		71	80	90	100	112	132	160	180
Stator	Material Paint colour shade	Cast iron EN-GJL-200 Blue, Munsell 8B 4.5/3.25 / NCS 4822 B05G							
	Paint thickness	Two-pack PUR-paint, thickness ≥ 60 µm						Two-pack epoxy paint, thickness ≥ 80µm	
Bearing end shields	Material	Cast iron EN-GJL-150						Cast iron EN-GJL-200	
	Paint colour shade	Blue, Munsell 8B 4.5/3.25 / NCS 4822 B05G							
	Paint thickness	Two-pack PUR-paint, thickness ≥ 60 µm						Two-pack epoxy paint, thickness ≥ 80µm	
Bearings	D-end	6202 2RS C3	6204 2RS C3	6205 2RS C3	6206 2RS C3	6207 2RS C3	6208 2RS C3	6309/C3	6310/C3
	N-end	6202 2RS C3	6204 2RS C3	6205 2RS C3	6206 2RS C3	6206 2RS C3	6207 2RS C3	6309/C3	6309/C3
Axially-locked bearings	Inner bearing cover	On request						As standard, locked at D-end	
Bearing seal		2RS-integral seals						Gamma-ring asstd, radial seal on request	
Lubrication		Permanent grease lubrication.						Regreasable bearings as std, lifetime lubrica-tion as stocked option	
SPM-nipples		–						As standard	
Rating plate	Material	Stainless steel 0.80 Cr 18 Ni9						Stainless steel	
Terminal box	Frame material Cover material Cover screws material	Cast iron EN-GJL-150 Cast ironEN-GJL-150 Steel 5G, coated with zinc and yellow cromated						Cast iron EN-GJL-200 Cast iron EN-GJL-200	
Connections	Cable entries	2xM16	2xM25	2xM25	2xM32	2xM32	2xM32	2xM40	2xM40
	Terminals	6 terminals for connection with cable lugs (not included)							
Fan	Material	Reinforced glass fiber laminate or aluminium							
Fan cover	Material Paint colour shade	Steel Blue, Munsell 8B 4.5/3.25 / NCS 4822 B05G						Zinc coated steel	
	Paint thickness	Two-pack PUR-paint, thickness ≥ 60 µm						Two-pack polyester paint, thickness ≥ 80 µm	
Stator winding	Material Insulation	Copper Insulation class F							
	Winding protection	On request						3 pcs thermistors	
Rotor winding	Material	Pressure die-cast aluminium							
Balancing method		Half key balancing							
Key ways		Open key way						Closed key-way	
Drain holes		Optional						As standard, open on delivery	
Enclosure		IP 55, higher protection on request							
Cooling method		IC 411							

Non-sparking motors with cast iron frame in brief, basic design

Motor size		200	225	250	280	315	355	400
Stator	Material Paint colour shade	Cast iron EN-GJL-200 Blue, Munsell 8B 4.5/3.25 / NCS 4822 B05G						
	Paint thickness	Two-pack epoxy paint, thickness ≥ 80 µm						
Bearing end shields	Material	Cast iron EN-GJL-200			Cast iron EN-GJL-200, except flange-mounted sizes 355-400 Spheroidal graphit EN-GJS-400			
	Paint colour shade	Blue, Munsell 8B 4.5/3.25 / NCS 4822 B05G						
	Paint thickness	Two-pack epoxy paint, thickness ≥ 80 µm			Two-pack epoxy paint, thickness ≥ 70 µm			
Bearings	D-end 2-pole 4-12 -pole	6312/C3	6313/C3	6315/C3	6316/C4 6316/C3	6316/C4 6319/C3	6319M/C4 6322/C3	6319M/C4 6322/C3
	N-end 2-pole 4-12 -pole	6310/C3	6312/C3	6313/C3	6316/C4 6316/C3	6316/C4 6316/C3	6319M/C4 6319/C3	6319M/C4 6319/C3
Axially-locked bearings	Inner bearing cover	As standard, locked at D-end						
Bearing seals		Gamma-ring as standard, radial seal on request			V-ring as standard, radial seal on request			
Lubrication		Regreasable bearings as standard, lifetime lubrication as stocked option			Regreasable bearings, regreasing nipples, M10x1			
SPM-nipples		As standard			Optional		As standard	
Rating plate	Material	Stainless steel						
Terminal box	Frame material	Cast iron EN-GJL-200			Cast iron EN-GJL-150			
	Cover material Cover screws material	Cast iron EN-GJL-200 Steel 5G, coated with zinc and yellow cromated			Cast iron EN-GJL-150			
Connections	Cable-entries 2-, 4-pole 6-pole	2xM50	2xM50	2xM50	2xM63	2xM63	2xØ60/80 2xØ60	2xØ80 2xØ60/80
	Terminals	6 terminals for connection with cable lugs (not included)						
Fan	Material	Reinforced glass fiber laminate or aluminium			Reinforced glass fiber, aluminium or polypropylene with metal hub			
Fan cover	Material Paint colour shade	Zinc coated steel Blue, Munsell 8B 4.5/3.25 / NCS 4822 B05G			Steel			
	Paint thickness	Zinc coated steel			Two-pack epoxy polyester paint, thickness ≥ 80 µm			
Stator winding	Material Insulation	Copper Insulation class F						
	Winding protection	3 pcs thermistors						
Rotor winding	Material	Pressure die-cast aluminium			Pressure die-cast aluminium or copper			
Balancing method		Half key balancing						
Key way		Closed key way			Open key way			
Drain holes		As standard, open on delivery						
Enclosure		IP 55, higher protection on request						
Cooling method		IC 411						

Motors for dust ignition protection (DIP)

Range

	Standards	Frame	Size	Output range
Category 2 D - T125°C - IP 65	EN 50281-1-1	aluminium cast iron	90 - 250 80 - 400	1.1 - 55 kW 0.55 - 500 kW
Category 3 D - T125°C - IP 55	EN 50281-1-1	aluminium cast iron	90 - 250 71 - 400	1.1 - 55 kW 0.25 - 500 kW

Terminal boxes

The terminal boxes of the dust ignition proof motors comply with the requirements of the standards for this type and have the same IP protection as the motors. Furthermore they prevent all ignition sources such as sparks, excessive overheating etc., and are equipped with no self-loosening terminals.

Terminal boxes are mounted on the top of the basic motor versions. The terminal box is either rotatable or at least allows cable entry from either side which gives a choice of connection possibilities.

Aluminium motors

In sizes 90 to 180 the terminal box is made of aluminium, the bottom section is integrated with the stator and provided with two openings on both sides.

In sizes 200 to 250 the terminal box and cover are made of deep drawn steel, bolted to the stator. The terminal box is provided with two flange openings, one on each side.

Cast iron motors

The terminal boxes in motors 71-132 and 200-250 are 4x90° turnable as standard, in motor sizes 160 to 180 and 280-400 as standard 2x180° and as easy option 4x90°.

In sizes 80 to 132 the motors are provided with cast iron terminal boxes with tapped cable entry holes on one side. Cable glands can be provided on request, see variant codes. In motor sizes 160 to 400 the cast iron terminal box is equipped with cable glands or cable boxes as standard.

Cable entries and cable glands

Aluminium motors and cast iron motors up to size 132 are delivered without cable glands but are delivered with threaded cable entries suitable for the following cable gland sizes. In cast iron motor sizes 160 to 400 the terminal box is equipped with cable glands or cable boxes as standard.

In case there are two cable entries, one is plugged with a threaded plug and the other with a plastic transport plug.

Cable glands for dust ignition proof motors are a very important equipment. To ensure that they are correctly dimensioned according to the cables used, we recommend that the installator of the motors supplies them.

If cable glands are ordered with the motor, we strongly recommend EEx e approved cable glands with clamping device, see variant code no. 737.

Motor sizes 90-250 with aluminium frame

Motor size	Opening	Metric cable entry	Comparison Pg gland	Cable gland diameter mm, min-max.
90-100	Knock-out	4 x M20	4 x Pg16	Ø9 - 13
112-132	Knock-out	2 x (M25 + M20)	2 x (Pg 21 + Pg 16)	Ø11-16
160-180	Knock-out	4 x M40 + 2 x M20	4 x Pg 29 + 2 x Pg 9	Ø19-27 + Ø3-6
200	Knock-out	–	4 x Pg 36	Ø31-34.5
225-250	2 x FL13	–	4 x Pg 29	Ø24-27

Motor sizes 71-250 with cast iron frame

Motor size	Metric cable entry	Comparison Pg gland	Cable gland diameter mm, min-max.	Max. connection cable area mm2	Terminal bolt size 6 x
71	**2 x M16**	2 x Pg 11	2x Ø5-10	6	M4
80-90	**2 x M25**	2 x Pg 16	2x Ø8-13	6	M4
100-112	**2 x M32**	2 x Pg 21	2x Ø15-20	16	M5
132	**2 x M32**	2 x Pg 21	2x Ø15-20	16	M5
160	**2 x M40 + 2 x M20**	2 x Pg 29 + 2 x Pg 13.5	2x Ø18-27	25	M6
180	**2 x M40 + 2 x M20**	2 x Pg 29 + 2 x Pg 13.5	2x Ø18-27	25	M6
200	**2 x M50 + 2 x M20**	2 x Pg 36 + 2 x Pg 13.5	2x Ø26-35	35	M10
225	**2 x M50 + 2 x M20**	2 x Pg 36 + 2 x Pg 13.5	2x Ø26-35	50	M10
250	**2 x M50 + 2 x M20**	2 x Pg 42 + 2 x Pg 13.5	2x Ø32-49	70	M10

Information on metric cable glands available from ABB Motors on request.

Co-ordination of terminal boxes and cable entries

Cast iron motors sizes 280-400 motors with top-mounted terminal box

Motor size	Flange or adapter	Cable box or cable gland	**Gland thread**	Cable diameter	Max. connection cable area mm^2	Terminal bolt size	Voltage/ frequency code
3000 r/min (2 poles)							
280	3GZF 294 730-749	2x 3GZF 294 730-613	**2x M63x1.5**	2x Ø32-49	2x150	M12	
315	3GZF 294 730-753	2x 3GZF 294 730-613	**2x M63x1.5**	2x Ø32-49	2x240	M12	
355 S	MPMM-ZL1	3GZF 294 730-301		2x Ø48-60	4x240	M12	D
	-	3GZF 294 730-301		2x Ø48-60	2x240	M12	E
355 SM_	MPMM-ZL1	3GZF 294 730-301		2x Ø48-60	4x240	M12	
355 ML_	MPMM-ZL1	LNPB 3328		2x Ø60-80	4x240	M12	
400 M_	MPMM-ZL1	LNPB 3328		2x Ø60-80	4x240	M12	
400 LK_	MPMM-ZL1	LNPB 3328		2x Ø60-80	4x240	M12	
1500 r/min (4 poles)							
280	3GZF 294 730-749	2x 3GZF 294 730-613	**2x M63x1.5**	2x Ø32-49	2x150	M12	
315	3GZF 294 730-753	2x 3GZF 294 730-613	**2x M63x1.5**	2x Ø32-49	2x240	M12	
355 S	MPMM-ZL1	3GZF 294 730-301		2x Ø48-60	4x240	M12	D
	-	3GZF 294 730-301		2x Ø48-60	2x240	M12	E
355 SM_	MPMM-ZL1	3GZF 294 730-301		2x Ø48-60	4x240	M12	
355 ML_	MPMM-ZL1	LNPB 3328		2x Ø60-80	4x240	M12	
400 M_	MPMM-ZL1	LNPB 3328		2x Ø60-80	4x240	M12	
400 LKA	MPMM-ZL1	LNPB 3328		2x Ø60-80	4x240	M12	D
	MPMM-ZL1	LNPB 3328		2x Ø60-80	4x240	M12	E
400 LKB, LKC	MPMM-ZL1	LNPB 3328		2x Ø60-80	4x240	M12	
1000 r/min (6 poles)							
280	3GZF 294 730-749	2x 3GZF 294 730-613	**2x M63x1.5**	2x Ø32-49	2x150	M12	
315	3GZF 294 730-753	2x 3GZF 294 730-613	**2x M63x1.5**	2x Ø32-49	2x240	M12	
355 S, SMA	-	3GZF 294 730-301		2x Ø48-60	2x240	M12	
355 SMB	MPMM-ZL1	3GZF 294 730-301		2x Ø48-60	4x240	M12	D
	-	3GZF 294 730-301		2x Ø48-60	2x240	M12	E
355 ML_	MPMM-ZL1	3GZF 294 730-301		2x Ø48-60	4x240	M12	
400 M	MPMM-ZL1	LNPB 3328		2x Ø60-80	4x240	M12	D
	-	3GZF 294 730-301		2x Ø48-60	2x240	M12	E
400 MA, MB	MPMM-ZL1	LNPB 3328		2x Ø60-80	4x240	M12	
400 LKA	MPMM-ZL1	LNPB 3328		2x Ø60-80	4x240	M12	
400 LKB, LKC	MPMM-ZL1	LNPB 3328		2x Ø60-80	4x240	M12	D
	MPMM-ZL1	LNPB 3328		2x Ø60-80	4x240	M12	E
750 r/min (8 poles)							
280	3GZF 294 730-749	2x 3GZF 294 730-613	**2x M63x1.5**	2x Ø32-49	2x150	M12	
315	3GZF 294 730-753	2x 3GZF 294 730-613	**2x M63x1.5**	2x Ø32-49	2x240	M12	
355 S, SMA	-	3GZF 294 730-301		2x Ø48-60	2x240	M12	
355 MLA	-	3GZF 294 730-301		2x Ø48-60	2x240	M12	
355 MLC	MPMM-ZL1	3GZF 294 730-301		2x Ø48-60	4x240	M12	D
	-	3GZF 294 730-301		2x Ø48-60	2x240	M12	E
400 M	-	3GZF 294 730-301		2x Ø48-60	2x240	M12	D
400 MA	MPMM-ZL1	3GZF 294 730-301		2x Ø48-60	4x240	M12	D
	-	3GZF 294 730-301		2x Ø48-60	2x240	M12	E
400 LK_	MPMM-ZL1	LNPB 3328		2x Ø60-80	4x240	M12	

Voltage/frequency codes:
D - 380-420 VΔ 50 Hz, 660-690 VY 50 Hz, 440-480 VΔ 60 Hz
E - 500 VΔ 50 Hz, 575 VΔ 60 Hz

Examples:

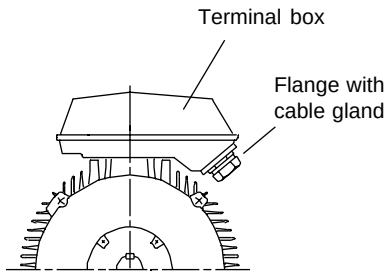

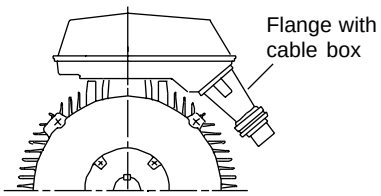

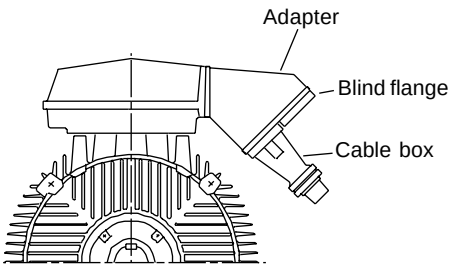

Co-ordination of terminal boxes and cable entries

Cast iron motors sizes 280-400 motors with side-mounted terminal box

Motor size	Flange or adapter	Cable box or cable gland	**Gland thread**	Cable diameter	Max. connection cable area mm²	Terminal bolt size	Voltage/ frequency code
3000 r/min (2 poles)							
280	3GZF 294 730-749	2x 3GZF 294 730-613	**2x M63x1.5**	2x Ø32-49	2x150	M12	
315	3GZF 294 730-753	2x 3GZF 294 730-613	**2x M63x1.5**	2x Ø32-49	2x240	M12	
355 S	3GZF 294 730-759	3GZF 294 730-301		2x Ø48-60	4x240	M12	D
	-	3GZF 294 730-301		2x Ø48-60	2x240	M12	E
355 SM_	3GZF 294 730-759	3GZF 294 730-301		2x Ø48-60	4x240	M12	
355 ML_	3GZF 294 730-759	LNPB 3328		2x Ø60-80	4x240	M12	
400 M_	3GZF 294 730-759	LNPB 3328		2x Ø60-80	4x240	M12	
400 LK_	3GZF 294 730-759	LNPB 3328		2x Ø60-80	4x240	M12	
1500 r/min (4 poles)							
280	3GZF 294 730-749	2x 3GZF 294 730-613	**2x M63x1.5**	2x Ø32-49	2x150	M12	
315	3GZF 294 730-753	2x 3GZF 294 730-613	**2x M63x1.5**	2x Ø32-49	2x240	M12	
355 S	3GZF 294 730-759	3GZF 294 730-301		2x Ø48-60	4x240	M12	D
	-	3GZF 294 730-301		2x Ø48-60	2x240	M12	E
355 SM_	3GZF 294 730-759	3GZF 294 730-301		2x Ø48-60	4x240	M12	
355 ML_	3GZF 294 730-759	LNPB 3328		2x Ø60-80	4x240	M12	
400 M_	3GZF 294 730-759	LNPB 3328		2x Ø60-80	4x240	M12	
400 LKA	3GZF 294 730-759	LNPB 3328		2x Ø60-80	4x240	M12	D
	3GZF 294 730-759	LNPB 3328		2x Ø60-80	4x240	M12	E
400 LKB, LKC	3GZF 294 730-759	LNPB 3328		2x Ø60-80	4x240	M12	
1000 r/min (6 poles)							
280	3GZF 294 730-749	2x 3GZF 294 730-613	**2x M63x1.5**	2x Ø32-49	2x150	M12	
315	3GZF 294 730-753	2x 3GZF 294 730-613	**2x M63x1.5**	2x Ø32-49	2x240	M12	
355 S	-	3GZF 294 730-301		2x Ø48-60	2x240	M12	
355 SMB	3GZF 294 730-759	3GZF 294 730-301		2x Ø48-60	4x240	M12	D
	-	3GZF 294 730-301		2x Ø48-60	2x240	M12	E
355 MLA	3GZF 294 730-759	3GZF 294 730-301		2x Ø48-60	4x240	M12	
400 M	3GZF 294 730-759	LNPB 3328		2x Ø60-80	4x240	M12	D
	-	3GZF 294 730-301		2x Ø48-60	2x240	M12	E
400 MA, MB	3GZF 294 730-759	LNPB 3328		2x Ø60-80	4x240	M12	
400 LKA	3GZF 294 730-759	LNPB 3328		2x Ø60-80	4x240	M12	
400 LKB, LKC	3GZF 294 730-759	LNPB 3328		2x Ø60-80	4x240	M12	D
	3GZF 294 730-759	LNPB 3328		2x Ø60-80	4x240	M12	E
750 r/min (8 poles)							
280	3GZF 294 730-749	2x 3GZF 294 730-613	**2x M63x1.5**	2x Ø32-49	2x150	M12	
315	3GZF 294 730-753	2x 3GZF 294 730-613	**2x M63x1.5**	2x Ø32-49	2x240	M12	
355 S	-	3GZF 294 730-301		2x Ø48-60	2x240	M12	
355 MLA	-	3GZF 294 730-301		2x Ø48-60	2x240	M12	
355 MLC	3GZF 294 730-759	3GZF 294 730-301		2x Ø48-60	4x240	M12	D
	-	3GZF 294 730-301		2x Ø48-60	2x240	M12	E
400 M	-	3GZF 294 730-301		2x Ø48-60	2x240	M12	D
400 MA	3GZF 294 730-759	3GZF 294 730-301		2x Ø48-60	4x240	M12	D
	-	3GZF 294 730-301		2x Ø48-60	2x240	M12	E
400 LK_	3GZF 294 730-759	LNPB 3328		2x Ø60-80	4x240	M12	

Voltage/frequency codes:
D - 380-420 VΔ 50 Hz, 660-690 VY 50 Hz, 440-480 VΔ 60 Hz
E - 500 VΔ 50 Hz, 575 VΔ 60 Hz

Examples:

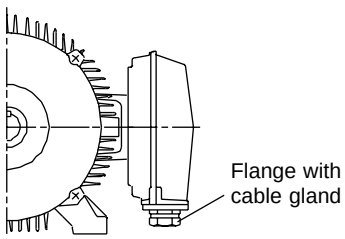

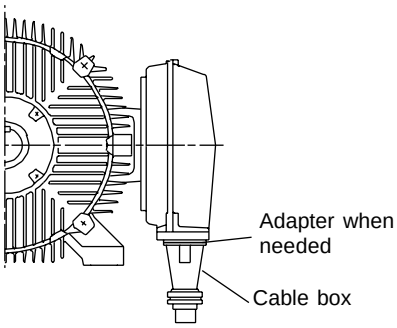

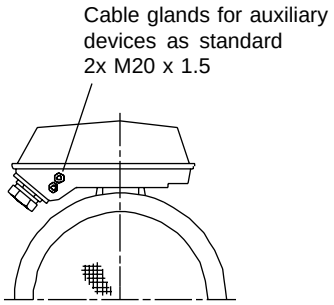

Technical data – Dust ignition proof motors

Category 2 D - T125°C - IP 65
Aluminium frame, sizes 90 to 250

IC 411; Insulation class F, temperature rise class B

Output kW	Type designation	Product code	Speed r/min	Effi-ciency %	Power factor cos φ	Current I_N A	Current I_s/I_N	Torque T Nm	Torque T_s/T_N	Torque T_{max}/T_N	Moment of inertia J=1/4GD² kgm²	Weight kg	Sound pressure level LP dB(A)
3000 r/min = 2 poles			**400 V 50 Hz [1)]**										
1.5	**M3AAD 90 S**	3GAA 091 001-••B	2870	80.1	0.82	3.4	5.5	5	2.4	3.0	0.002	13	63
2.2	**90 L**	091 002-••B	2870	80.8	0.86	4.6	7.0	7.5	2.7	3.0	0.002	16	63
3	**100 L**	101 001-••B	2900	86.0	0.88	6	7.5	10	2.7	3.6	0.004	21	65
4	**112 M**	111 001-••B	2850	86.0	0.91	7.4	7.5	13.4	2.8	3.0	0.01	25	63
5.5	**132 SA**	131 001-••B	2855	86.0	0.88	11	7.8	18.4	3.2	3.4	0.014	37	75
7.5	**132 SB**	131 002-••B	2855	87.0	0.90	14	8.5	25.1	3.4	3.6	0.016	42	73
11	**160 MA**	161 101-••D	2930	91.2	0.88	20	6.3	36	1.9	2.5	0.039	73	69
15	**160 M**	161 102-••D	2920	91.7	0.90	27	6.6	49	2.3	2.5	0.047	84	69
18.5	**160 L**	161 103-••D	2920	92.4	0.91	32	7.3	60	2.6	2.7	0.053	94	69
22	**180 M**	181 101-••D	2930	92.8	0.89	39	7.2	71	2.5	2.7	0.077	119	69
30	**MBT 200 LA**	AC 616 005-••	2945	91.1	0.89	53	6.5	97	2.6	3.0	0.142	172	75
37	**200 L**	616 006-••	2950	92.6	0.90	64	7.8	120	2.9	3.2	0.17	195	75
45	**225 M**	616 007-••	2950	92.1	0.89	79	7.1	146	2.2	3.1	0.284	225	76
55	**250 M**	616 008-••	2950	93.1	0.90	95	7.6	178	2.3	3.7	0.345	320	72
1500 r/min = 4 poles			**400 V 50 Hz [1)]**										
1.1	**M3AAD 90 S**	3GAA 092 001-••B	1410	77.5	0.81	2.6	5.0	7.5	2.2	2.7	0.003	13	50
1.5	**90 L**	092 002-••B	1420	80.3	0.79	3.5	5.0	10	2.4	2.9	0.004	16	50
2.2	**100 LA**	102 001-••B	1430	83.0	0.81	4.8	5.5	15	2.4	2.9	0.007	21	64
3	**100 LB**	102 002-••B	1430	85.0	0.81	6.5	5.5	20	2.5	2.9	0.008	24	66
4	**112 M**	112 001-••B	1435	84.5	0.80	8.6	7.0	26.6	2.9	3.1	0.015	27	60
5.5	**132 S**	132 001-••B	1450	87.0	0.83	11	7.3	36.2	2.2	3.0	0.031	40	66
7.5	**132 M**	132 002-••B	1450	88.0	0.83	15	7.9	49.4	2.5	3.2	0.038	48	66
11	**160 M**	162 101-••D	1460	90.3	0.81	22	6.7	72	2.9	2.8	0.067	75	62
15	**160 L**	162 102-••D	1455	91.1	0.84	29	6.8	98	3.0	2.8	0.091	94	62
18.5	**180 M**	182 101-••D	1470	92.3	0.84	35	7.0	120	3.1	2.7	0.161	124	62
22	**180 L**	182 102-••D	1470	92.4	0.83	41	7.0	143	2.9	2.8	0.191	141	63
30	**MBT 200 L**	AC 616 013-••	1480	91.7	0.82	57	7.6	194	2.6	2.9	0.31	192	68
37	**225 S**	616 014-••	1485	93.2	0.82	70	6.8	238	2.7	2.7	0.405	225	70
45	**225 M**	616 015-••	1485	93.7	0.83	83	7.3	289	2.8	2.9	0.495	250	66
55	**250 M**	616 016-••	1485	93.7	0.82	103	7.0	354	2.7	3.0	0.567	320	70

[1)] Motors are certified for the voltages 380-400 V 50 Hz according to IEC 34-1.
Values above are given for 400 V 50 Hz; data for any voltages < 500 V on request.

Notes:
When ordering motors, variant code 453 'DIP according to EN 50281-1-1, T= 125°C, category 2 D, IP 65' has to be added.

Data for other voltages and frequencies, on request.

The two bullets in the product code indicate choice of mounting arrangement (see ordering information), voltage and frequency (below).

S	D	E	F	G	H	X
380 VY 50 Hz 400 VY 50 Hz 220 VΔ 50 Hz 230 VΔ 50 Hz 440 VY 60 Hz	380 VΔ 50 Hz 400 VΔ 50 Hz 440 VΔ 60 Hz	500 VΔ 50 Hz	500 VY 50 Hz	415 VY 50 Hz	415 VΔ 50 Hz	Other rated voltage, connection or frequency, max. 500 V

Technical data – Dust ignition proof motors

Category 2 D - T125°C - IP 65
Aluminium frame, sizes 90 to 250

IC 411; Insulation class F, temperature rise class B

Output kW	Type designation	Product code	Speed r/min	Effi-ciency %	Power factor cos φ	Current I_N A	Current I_s/I_N	Torque T Nm	Torque T_s/T_N	Torque T_{max}/T_N	Moment of inertia J=1/4GD² kgm²	Weight kg	Sound pressure level LP dB(A)
1000 r/min = 6 poles			**400 V 50 Hz [1)]**										
0.75	**M3AAD 90 S**	3GAA 093 001-••B	930	71.5	0.67	2.4	4.0	7.5	1.9	2.3	0.003	13	44
1.1	**90 L**	093 002-••B	930	74.4	0.69	3.3	4.0	11	1.9	2.3	0.004	16	44
1.5	**100 L**	103 001-••B	950	80.0	0.71	3.9	4.5	15	1.9	2.3	0.008	23	49
2.2	**112 M**	113 001-••B	940	80.5	0.74	5.4	5.6	22.3	2.1	2.7	0.015	27	66
3	**132 S**	133 001-••B	960	84.5	0.75	6.9	6.1	29.8	2.0	2.6	0.031	39	57
4	**132 MA**	133 002-••B	960	85.5	0.78	8.7	7.1	39.7	2.0	2.8	0.038	46	61
5.5	**132 MB**	133 003-••B	955	86.0	0.78	12	6.9	55	2.2	2.8	0.045	54	57
7.5	**160 M**	163 101-••D	970	89.3	0.79	15	6.7	74	2.0	2.8	0.089	88	59
11	**160 L**	163 102-••D	970	89.8	0.78	23	7.1	109	2.2	2.9	0.107	102	59
15	**180 L**	183 101-••D	970	90.8	0.78	31	7.0	148	2.1	3.0	0.217	151	59
18.5	**MBT 200 LA**	AC 616 020-••	980	89.5	0.80	37	6.4	180	2.1	3.0	0.315	192	68
22	**200 L**	616 021-••	980	89.5	0.80	45	7.4	214	2.3	3.1	0.34	202	65
30	**225 M**	616 022-••	985	91.5	0.83	57	6.5	291	1.7	3.1	0.766	235	68
37	**250 M**	616 023-••	985	92.0	0.82	71	6.5	359	1.9	3.3	0.88	330	69
750 r/min = 8 poles			**400 V 50 Hz [1)]**										
0.37	**M3AAD 90 S**	3GAA 094 001-••B	700	61.5	0.56	1.6	3.0	5	1.9	2.4	0.003	13	43
0.55	**90 L**	094 002-••B	690	62.9	0.57	2.4	3.0	7.5	1.7	2.1	0.004	16	43
0.75	**100 LA**	104 001-••B	700	72.0	0.59	2.6	3.5	10	2.1	2.7	0.007	20	46
1.1	**100 LB**	104 002-••B	700	73.0	0.64	3.4	3.5	15	2.1	2.7	0.008	23	46
1.5	**112 M**	114 001-••B	695	74.5	0.65	4.5	4.1	20.6	1.9	2.4	0.016	28	52
2.2	**132 S**	134 001-••B	720	80.5	0.67	5.9	5.3	29.2	1.6	2.5	0.038	46	56
3	**132 M**	134 002-••B	720	82.0	0.68	7.8	5.5	39.8	1.8	2.5	0.045	53	56
4	**160 MA**	164 101-••D	715	84.1	0.69	10	5.2	54	2.1	2.4	0.072	75	59
5.5	**160 M**	164 102-••D	710	84.7	0.70	13	5.4	74	2.4	2.6	0.091	88	59
7.5	**160 L**	164 103-••D	715	86.3	0.70	18	5.4	100	2.4	2.8	0.131	118	59
11	**180 L**	184 101-••D	720	88.7	0.76	24	5.9	146	2.4	2.6	0.224	147	59
15	**MBT 200 L**	AC 616 028-••	730	85.6	0.75	34	5.7	196	2.0	3.0	0.314	187	64
18.5	**225 S**	616 029-••	730	88.1	0.78	39	5.3	242	2.1	2.4	0.587	215	65
22	**225 M**	616 030-••	735	89.1	0.77	46	5.6	286	2.2	2.7	0.722	235	63
30	**250 M**	616 031-••	735	89.6	0.74	65	5.9	390	2.5	3.0	0.83	330	65

[1)] Motors are certified for the voltages 380-400 V 50 Hz according to IEC 34-1.
Values above are given for 400 V 50 Hz; data for any voltages < 500 V on request.

Notes:
When ordering motors, variant code 453 'DIP according to EN 50281-1-1, T= 125°C, category 2 D, IP 65' has to be added.

Data for other voltages and frequencies, on request.

The two bullets in the product code indicate choice of mounting arrangement (see ordering information), voltage and frequency (below).

S	D	E	F	G	H	X
380 VY 50 Hz 400 VY 50 Hz 220 VΔ 50 Hz 230 VΔ 50 Hz 440 VY 60 Hz	380 VΔ 50 Hz 400 VΔ 50 Hz 440 VΔ 60 Hz	500 VΔ 50 Hz	500 VY 50 Hz	415 VY 50 Hz	415 VΔ 50 Hz	Other rated voltage, connection or frequency, max. 500 V

Technical data – Dust ignition proof motors

Category 2 D - T125°C - IP 65
Cast iron frame, sizes 80 to 315

IC 411; Insulation class F, temperature rise class B

Output kW	Design	Type designation	Product code	Speed r/min	Efficiency %	Power factor cos φ	Current I_N A	Current I_s/I_N	Torque T Nm	Torque T_s/T_N	Torque T_{max}/T_N	Moment of inertia J=1/4GD² kgm²	Weight kg	Sound pressure level LP dB(A)
3000 r/min = 2 poles				**400 V 50 Hz [1)]**										
0.75		**M2BA 80 LS**	3GBA 081 310-••E	2905	76.0	0.80	2.2	8.4	2.5	3.5	4.0	0.0009	24	59
1.1		**80 L**	081 320-••E	2850	78.3	0.82	2.5	6.4	3.7	2.5	2.7	0.0009	24	59
1.5		**90 S**	091 110-••E	2880	80.6	0.85	3.3	6.6	5	2.3	2.7	0.002	32	65
2.2		**90 L**	091 510-••E	2880	83.0	0.88	4.6	7.0	7.3	2.5	3.2	0.002	37	65
3		**100 L**	101 510-••E	2910	84.5	0.88	5.9	7.6	9.8	2.6	2.9	0.004	45	66
4		**112 M**	111 310-••E	2875	84.5	0.91	7.4	7.2	13.2	2.3	3.0	0.005	46	67
5.5		**132 SA**	131 110-••E	2855	85.4	0.89	11	7.9	18.4	3.2	3.5	0.014	69	69
7.5		**132 SB**	131 120-••E	2870	87.2	0.89	13	7.8	23	3.3	3.5	0.016	79	69
11		**M3GP 160 MLA**	3GGP 161 410-••G	2936	91.2	0.87	20	7.2	36	2.9	3.3	0.039	147	71
15		**160 MLB**	161 420-••G	2934	91.6	0.88	28	7.5	49	3.1	3.5	0.047	156	71
18.5		**160 MLC**	161 430-••G	2934	92.4	0.90	33	7.5	60	2.8	3.4	0.054	167	71
22	**HO**	**160 MLD**	161 440-••G	2929	91.4	0.90	39	7.4	72	2.8	3.4	0.059	173	77
22		**180 MLA**	181 410-••G	2938	92.6	0.90	39	6.9	72	2.5	3.1	0.077	194	71
30	**HO**	**180 MLB**	181 420-••G	2944	92.8	0.88	54	7.5	97	2.8	3.5	0.092	210	78
30		**200 MLA**	201 410-••G	2946	94.0	0.88	54	7.4	97	3.0	3.2	0.15	275	72
37		**200 MLC**	201 430-••G	2948	94.1	0.89	65	7.6	120	2.9	3.2	0.19	305	75
45		**225 SMB**	221 220-••G	2968	94.7	0.87	79	7.2	145	2.7	3.0	0.26	365	76
55	**HO**	**225 SMC**	221 230-••G	2965	94.3	0.88	96	7.1	177	2.6	3.0	0.29	385	80
55		**250 SMA**	251 210-••G	2970	94.6	0.88	96	7.7	177	2.4	3.1	0.49	425	75
75	**HO**	**250 SMB**	251 220-••G	2969	95.1	0.89	129	7.9	241	2.6	3.2	0.57	465	80
75		**M2BA 280 SMA**	3GBA 281 210-••A	2977	94.9	0.88	131	7.5	241	2.3	3.3	0.8	590	77
90		**280 SMB**	281 220-••A	2975	95.1	0.90	152	7.6	289	2.3	3.1	0.9	630	77
110		**315 SMA**	311 210-••A	2982	95.0	0.85	194	7.6	352	2.0	3.0	1.2	880	80
132		**315 SMB**	311 220-••A	2982	95.2	0.86	228	7.4	423	2.2	3.0	1.4	920	80
155		**315 SMC**	311 230-••A	2981	96.1	0.89	263	7.7	496	2.4	3.1	1.7	1010	80
180		**315 MLA**	311 410-••A	2980	96.0	0.88	298	8.5	577	2.8	3.1	2.1	1170	80

[1)] Motors are certified for the voltages 380-400-415 V 50 Hz according to IEC 34-1. Values above are given for 400 V 50 Hz; data for other voltages on request.

Design HO = High-output design. The output of these motors is one step higher than the basic with rated outputs in accordance with CENELEC.

Notes:
- **When ordering motors, variant code 453 'DIP according to EN 50281-1-1, T= 125°C, category 2 D, IP 65' has to be added.**
- **When ordering sizes 160-200 with lifetime lubrication, variant code 195 'Bearings greased for life' has to be added.**

Data for other voltages and frequencies, on request.

The two bullets in the product code indicate choice of mounting arrangement (see ordering information), voltage and frequency (below).

S	D	A [1)]	B [1)]	E	F	X
380 VY 50 Hz	380 VΔ 50 Hz	380 VY 50 Hz	380 VΔ 50 Hz	500 VΔ 50 Hz	500 VY 50 Hz	Other rated voltage, connection or frequency, max. 690 V
400 VY 50 Hz	400 VΔ 50 Hz	220 VΔ 50 Hz	660 VY 50 Hz	575 VΔ 60 Hz		
415 VY 50 Hz	415 VΔ 50 Hz					
220 VΔ 50 Hz	660 VY 50 Hz	**G [1)]**	**H [1)]**	**T**	**U**	
230 VΔ 50 Hz	690 VY 50 Hz	415 VY 50 Hz	415 VΔ 50 Hz	660 VΔ 50 Hz	690 VΔ 50 Hz	
440 VY 60 Hz	440 VΔ 60 Hz					

[1)] On request for motor sizes 315.

Technical data – Dust ignition proof motors

Category 2 D - T125°C - IP 65
Cast iron frame, sizes 80 to 355

IC 411; Insulation class F, temperature rise class B

Output kW	Design	Type designation	Product code	Speed r/min	Efficiency %	Power factor cos φ	Current I_N A	Current I_s/I_N	Torque T Nm	Torque T_s/T_N	Torque T_{max}/T_N	Moment of inertia J=1/4GD² kgm²	Weight kg	Sound pressure level LP dB(A)
1500 r/min = 4 poles				**400 V 50 Hz [1]**										
0.55	**M2BA**	**80 LS**	3GBA 082 310-••E	1450	76.6	0.62	1.6	6.5	3.6	3.9	3.9	0.002	24	45
0.75		**80 L**	082 320-••E	1415	76.8	0.70	2	5.6	5	2.8	2.8	0.002	24	45
1.1		**90 S**	092 110-••E	1420	77.8	0.79	2.6	4.7	7.4	2.0	2.5	0.0032	32	54
1.5		**90 L**	092 510-••E	1420	79.8	0.78	3.5	5.5	10.1	2.5	2.9	0.0043	36	54
2.2		**100 LA**	102 510-••E	1435	81.6	0.81	4.8	6.3	14.6	2.4	2.4	0.0069	44	52
3		**100 LB**	102 520-••E	1435	83.6	0.80	6.5	6.3	20	2.5	2.7	0.0082	47	52
4		**112 M**	112 310-••E	1440	83.4	0.77	9.1	6.4	27	3.0	3.3	0.01	51	60
5.5		**132 S**	132 110-••E	1450	86.8	0.83	11	7.3	36.1	2.2	3.0	0.031	79	60
7.5		**132 MB**	132 320-••E	1450	87.3	0.83	15	8.1	49.3	2.9	3.3	0.048	93	60
11	**M3GP**	**160 MLC**	3GGP 162 430-••G	1470	91.3	0.82	23	7.7	71	3.1	3.6	0.09	166	65
15		**160 MLE**	162 450-••G	1467	92.0	0.83	30	7.6	98	3.1	3.6	0.121	189	67
18.5	**HO**	**160 MLF**	162 460-••G	1466	92.0	0.82	37	8.0	120	3.2	3.6	0.121	189	68
18.5		**180 MLA**	182 410-••G	1474	92.5	0.82	36	7.3	120	2.7	3.2	0.176	206	62
22		**180 MLB**	182 420-••G	1471	92.6	0.82	42	7.1	143	2.6	3.0	0.191	214	62
30 [2]	**HO**	**180 MLC**	182 430-••G	1473	92.3	0.80	59	7.8	194	3.1	3.4	0.239	233	66
30		**200 MLB**	202 420-••G	1475	93.5	0.84	56	7.4	194	3.3	3.0	0.34	305	61
37	**HO**	**200 MLC**	202 430-••G	1475	93.3	0.82	70	7.5	239	3.5	3.2	0.34	305	73
37		**225 SMB**	222 220-••G	1480	93.6	0.84	69	7.7	239	3.1	3.1	0.42	355	67
45		**225 SMC**	222 230-••G	1477	94.4	0.86	81	7.4	291	3.1	3.0	0.49	390	67
55	**HO**	**225 SMD**	222 240-••G	1476	94.0	0.85	100	7.6	356	3.3	3.1	0.49	390	74
55		**250 SMA**	252 210-••G	1479	94.6	0.83	101	6.9	355	2.5	3.1	0.72	415	66
75	**HO**	**250 SMB**	252 220-••G	1476	94.7	0.86	133	7.2	485	2.7	3.2	0.88	470	73
75	**M2BA**	**280 SMA**	3GBA 282 210-••A	1484	95.0	0.86	135	6.9	483	2.6	2.8	1.25	590	68
90		**280 SMB**	282 220-••A	1483	95.2	0.87	158	7.2	580	2.6	2.7	1.5	630	68
110		**315 SMA**	312 210-••A	1487	95.6	0.87	192	7.2	706	2.0	2.5	2.3	870	70
132		**315 SMB**	312 220-••A	1487	95.8	0.87	232	7.1	848	2.3	2.7	2.6	925	70
155		**315 SMC**	312 230-••A	1487	96.0	0.86	276	7.3	995	2.5	3.0	2.9	970	70
185		**315 MLA**	312 410-••A	1487	96.2	0.86	325	7.7	1188	2.7	3.1	3.5	1080	70
250		**355 S**	352 100-••A	1487	96.5	0.87	430	7.2	1606	2.3	2.7	6.5	1550	80
315		**355 SMA**	352 210-••A	1488	96.7	0.87	545	7.6	2022	2.5	2.9	8.2	1800	80
345		**355 SMB**	352 220-••A	1486	96.7	0.87	590	7.0	2217	2.3	2.7	8.2	1800	80
400		**355 MLA**	352 410-••A	1489	96.8	0.87	685	6.9	2565	1.6	2.8	10	2100	80
500		**355 MLC**	352 430-••A	1489	96.8	0.88	845	7.6	3207	1.3	2.9	10.5	2100	83

[1] Motors are certified for the voltages 380-400-415 V 50 Hz according to IEC 34-1. Values above are given for 400 V 50 Hz; data for other voltages on request.
[2] Temperature rise class F.

Design HO = High-output design. The output of these motors is one step higher than the basic with rated outputs in accordance with CENELEC.

Notes:
- **When ordering motors, variant code 453 'DIP according to EN 50281-1-1, T= 125°C, category 2 D, IP 65' has to be added.**
- **When ordering sizes 160-200 with lifetime lubrication, variant code 195 'Bearings greased for life' has to be added.**

Data for other voltages and frequencies, on request.

The two bullets in the product code indicate choice of mounting arrangement (see ordering information), voltage and frequency (below).

S	D	A [1]	B [1]	E	F [2]	X
380 VY 50 Hz	380 VΔ 50 Hz	380 VY 50 Hz	380 VΔ 50 Hz	500 VΔ 50 Hz	500 VY 50 Hz	Other rated voltage, connection or frequency, max. 690 V
400 VY 50 Hz	400 VΔ 50 Hz	220 VΔ 50 Hz	660 VY 50 Hz	575 VΔ 60 Hz		
415 VY 50 Hz	415 VΔ 50 Hz					
220 VΔ 50 Hz	660 VY 50 Hz	**G [1]**	**H [1]**	**T [2]**	**U [2]**	
230 VΔ 50 Hz	690 VY 50 Hz	415 VY 50 Hz	415 VΔ 50 Hz	660 VΔ 50 Hz	690 VΔ 50 Hz	
440 VY 60 Hz	440 VΔ 60 Hz					

[1] On request for motor sizes 315-355.
[2] On request for motor sizes 355.

Technical data – Dust ignition proof motors

Category 2 D - T125°C - IP 65
Cast iron frame, sizes 80 to 355

IC 411; Insulation class F, temperature rise class B

Output kW	Design	Type designation	Product code	Speed r/min	Efficiency %	Power factor cos φ	Current I_N A	Current $\frac{I_s}{I_N}$	Torque T Nm	Torque $\frac{T_s}{T_N}$	Torque $\frac{T_{max}}{T_N}$	Moment of inertia J=1/4GD² kgm²	Weight kg	Sound pressure level LP dB(A)
1000 r/min = 6 poles				**400 V 50 Hz [1]**										
0.37		**M2BA 80 LS**	3GBA 083 310-••E	950	67.2	0.50	1.6	4.2	3.7	4.3	4.5	0.002	24	42
0.55		**80 L**	083 320-••E	910	66.5	0.62	1.8	3.7	5.7	2.8	3.0	0.002	24	42
0.75		**90 S**	093 110-••E	930	71.7	0.66	2.3	3.7	7.7	2.0	2.3	0.0032	32	44
1.1		**90 L**	093 510-••E	930	72.2	0.66	2.8	3.9	11.3	2.2	2.6	0.0043	37	44
1.5		**100 L**	103 510-••E	950	78.4	0.71	4.1	4.8	15.1	2.1	2.6	0.0082	47	47
2.2		**112 M**	113 310-••E	950	79.4	0.70	5.7	4.8	22.1	2.5	2.8	0.01	51	50
3		**132 S**	133 110-••E	960	83.6	0.75	6.9	6.1	29.8	2.4	2.6	0.031	79	61
4		**132 MA**	133 310-••E	955	84.8	0.78	8.7	7.1	40	2.6	2.8	0.038	82	61
5.5		**132 MC**	133 330-••E	955	85.0	0.78	11	7.0	55	2.8	2.8	0.045	99	61
7.5		**M3GP 160 MLA**	3GGP 163 410-••G	965	88.6	0.80	16	6.5	74	1.9	3.0	0.088	160	57
11		**160 MLB**	163 420-••G	966	89.2	0.79	23	7.1	109	2.1	3.3	0.106	173	65
14	**[2)3)] HO**	**160 MLC**	163 430-••G	969	88.9	0.74	31	7.9	138	2.8	3.9	0.121	188	64
15		**180 MLB**	183 420-••G	970	90.7	0.79	31	6.6	148	1.6	2.8	0.221	233	67
18.5		**200 MLA**	203 410-••G	983	91.3	0.80	37	7.1	180	3.2	3.1	0.37	265	66
22		**200 MLB**	203 420-••G	983	91.6	0.81	43	7.5	214	3.2	3.2	0.43	285	61
30	**HO**	**200 MLC**	203 430-••G	983	91.6	0.80	60	7.5	292	3.5	3.4	0.49	305	65
30		**225 SMB**	223 220-••G	985	92.8	0.81	58	7.4	291	3.4	3.0	0.64	350	61
37	**HO**	**225 SMC**	223 230-••G	983	92.8	0.83	70	7.1	359	3.2	2.8	0.75	380	64
37		**250 SMA**	253 210-••G	987	93.4	0.81	71	7.2	358	3.2	2.9	1.16	420	66
45	**HO**	**250 SMB**	253 220-••G	987	93.6	0.82	84	7.5	435	3.2	2.8	1.49	465	66
45		**M2BA 280 SMA**	3GBA 283 210-••A	990	94.5	0.84	82	6.7	434	2.5	2.4	1.85	570	66
55		**280 SMB**	283 220-••A	990	94.7	0.84	101	7.0	531	2.7	2.6	2.2	610	66
75		**315 SMA**	313 210-••A	992	94.5	0.81	141	7.4	722	2.4	2.8	3.2	820	68
90		**315 SMB**	313 220-••A	992	95.5	0.84	163	7.5	866	2.4	2.8	4.1	910	68
110		**315 SMC**	313 230-••A	991	95.6	0.83	202	7.4	1060	2.5	2.9	4.9	980	68
132		**315 MLA**	313 410-••A	991	95.8	0.83	240	7.5	1272	2.7	3.0	5.8	1100	68
160		**355 S**	353 100-••A	992	95.9	0.85	280	6.8	1540	1.8	2.7	10.4	1500	75
200		**355 SMA**	353 210-••A	992	95.9	0.85	355	7.1	1925	2.0	2.7	12.5	1800	75
250		**355 SMB**	353 220-••A	992	96.0	0.84	450	7.5	2407	2.2	2.8	12.5	1800	75
305		**355 MLA**	353 410-••A	991	96.2	0.84	550	7.5	2940	2.1	3.1	14.6	2100	75
355		**355 MLC**	353 430-••A	991	96.4	0.84	635	7.6	3421	1.5	3.0	15.8	2100	78

1) Motors are certified for the voltages 380-400-415 V 50 Hz according to IEC 34-1. Values above are given for 400 V 50 Hz; data for other voltages on request.
2) Temperature rise class F.
3) Nominal power lower than Cenelec +1.

Design HO = High-output design. The output of these motors is one step higher than the basic with rated outputs in accordance with CENELEC.

Notes:
- **When ordering motors, variant code 453 'DIP according to EN 50281-1-1, T= 125°C, category 2 D, IP 65' has to be added.**
- **When ordering sizes 160-200 with lifetime lubrication, variant code 195 'Bearings greased for life' has to be added.**

Data for other voltages and frequencies, on request.

Technical data – Dust ignition proof motors

Category 2 D - T125°C - IP 65
Cast iron frame, sizes 80 to 355

IC 411; Insulation class F, temperature rise class B

Output kW	Design	Type designation	Product code	Speed r/min	Efficiency %	Power factor cos φ	Current I_N A	Current $\frac{I_s}{I_N}$	Torque T Nm	Torque $\frac{T_s}{T_N}$	Torque $\frac{T_{max}}{T_N}$	Moment of inertia J=1/4GD² kgm²	Weight kg	Sound pressure level LP dB(A)
750 r/min = 8 poles				**400 V 50 Hz [1)]**										
0.18		**M2BA 80 LS**	3GBA 084 310-••E	700	52.6	0.47	1.1	3.4	2.5	3.5	3.2	0.002	24	36
0.25		**80 L**	084 320-••E	690	57.5	0.56	1.3	3.2	3.5	2.5	2.3	0.002	24	36
0.37		**90 S**	094 110-••E	700	61.0	0.55	1.6	3.0	5	1.9	2.5	0.0031	32	36
0.55		**90 L**	094 510-••E	695	62.7	0.54	2.4	3.0	7.6	1.9	2.4	0.0047	37	36
0.75		**100 LA**	104 510-••E	715	71.7	0.57	2.8	3.6	10.1	2.3	3.0	0.0069	44	44
1.1		**100 LB**	104 520-••E	705	71.7	0.61	3.7	3.6	15	2.1	2.6	0.0083	47	44
1.5		**112 M**	114 310-••E	705	72.5	0.58	4.3	4.3	20	2.7	3.0	0.01	51	46
2.2		**132 S**	134 110-••E	720	79.5	0.68	5.9	5.3	29.2	1.8	2.5	0.038	82	56
3		**132 M**	134 310-••E	715	79.2	0.70	7.8	5.5	39.8	2.4	2.6	0.045	99	56
4		**M3GP 160 MLA**	3GGP 164 410-••G	717	83.0	0.70	10	5.2	53	1.8	2.8	0.071	146	59
5.5		**160 MLB**	164 420-••G	713	83.2	0.70	14	5.1	74	1.9	2.6	0.09	160	60
7.5		**160 MLC**	164 430-••G	714	85.5	0.70	18	5.7	100	1.8	2.9	0.121	188	60
11		**180 MLB**	184 420-••G	726	90.0	0.75	24	5.7	145	1.6	2.7	0.239	227	63
15		**200 MLA**	204 410-••G	735	90.2	0.78	31	7.2	195	2.5	3.3	0.45	280	64
18.5	**HO**	**200 MLB**	204 420-••G	734	90.2	0.79	37	7.2	241	2.4	3.2	0.54	300	64
18.5		**225 SMA**	224 210-••G	734	91.0	0.75	40	6.6	241	2.0	3.0	0.61	335	61
22		**225 SMB**	224 220-••G	733	91.2	0.78	46	6.2	287	1.9	2.7	0.68	350	61
30	**HO**	**225 SMC**	224 230-••G	733	91.1	0.76	62	6.5	391	2.0	3.0	0.75	375	65
30		**250 SMA**	254 210-••G	736	91.8	0.78	61	6.8	389	2.1	3.0	1.25	420	61
37	**HO**	**250 SMB**	254 220-••G	737	92.5	0.77	75	7.6	479	2.3	3.4	1.52	465	65
37		**M2BA 280 SMA**	3GBA 284 210-••A	741	93.4	0.78	74	7.3	477	1.8	3.1	1.85	570	65
45		**280 SMB**	284 220-••A	741	94.0	0.78	90	7.6	580	1.9	3.2	2.2	610	65
55		**315 SMA**	314 210-••A	740	93.9	0.80	104	7.1	710	1.6	2.7	3.2	820	62
75		**315 SMB**	314 220-••A	740	94.8	0.82	140	7.1	968	1.7	2.7	4.1	910	65
90		**315 SMC**	314 230-••A	740	94.8	0.82	167	7.4	1161	1.8	2.7	4.9	980	65
110		**315 MLA**	314 410-••A	740	95.2	0.83	202	7.3	1420	1.8	2.7	5.8	1100	72

[1)] Motors are certified for the voltages 380-400-415 V 50 Hz according to IEC 34-1. Values above are given for 400 V 50 Hz; data for other voltages on request.

Design HO = High-output design. The output of these motors is one step higher than the basic with rated outputs in accordance with CENELEC.

Notes:
- **When ordering motors, variant code 453 'DIP according to EN 50281-1-1, T= 125°C, category 2 D, IP 65' has to be added.**
- **When ordering sizes 160-200 with lifetime lubrication, variant code 195 'Bearings greased for life' has to be added.**

Data for other voltages and frequencies, on request.

The two bullets in the product code indicate choice of mounting arrangement (see ordering information), voltage and frequency (below).

S	D	A [1)]	B [1)]	E	F	X
380 VY 50 Hz	380 VΔ 50 Hz	380 VY 50 Hz	380 VΔ 50 Hz	500 VΔ 50 Hz	500 VY 50 Hz	Other rated voltage, connection or frequency, max. 690 V
400 VY 50 Hz	400 VΔ 50 Hz	220 VΔ 50 Hz	660 VY 50 Hz	575 VΔ 60 Hz		
415 VY 50 Hz	415 VΔ 50 Hz					
220 VΔ 50 Hz	660 VY 50 Hz	**G [1)]**	**H [1)]**	**T**	**U**	
230 VΔ 50 Hz	690 VY 50 Hz	415 VY 50 Hz	415 VΔ 50 Hz	660 VΔ 50 Hz	690 VΔ 50 Hz	
440 VY 60 Hz	440 VΔ 60 Hz					

[1)] On request for motor sizes 315.

Technical data – Dust ignition proof motors

Category 3 D - T125°C - IP 55
Aluminium frame, sizes 90 to 250

IC 411; Insulation class F, temperature rise class B

Output kW	Type designation	Product code	Speed r/min	Effi-ciency %	Power factor cos φ	Current I_N A	Current I_s/I_N	Torque T Nm	Torque T_s/T_N	Torque T_{max}/T_N	Moment of inertia J=1/4GD² kgm²	Weight kg	Sound pressure level LP dB(A)
3000 r/min = 2 poles			**400 V 50 Hz**										
1.5	**M3AAD 90 S**	3GAA 091 001-••B	2870	80.1	0.82	3.4	5.5	5	2.4	3.0	0.0019	13	63
2.2	**90 L**	091 002-••B	2870	80.8	0.86	4.6	7.0	7.5	2.7	3.0	0.0024	16	63
3	**100 L**	101 001-••B	2900	86.0	0.88	6	7.5	10	2.7	3.6	0.0041	21	65
4	**112 M**	111 001-••B	2850	86.0	0.91	7.4	7.5	13.4	2.8	3.0	0.01	25	63
5.5	**132 SA**	131 001-••B	2855	86.0	0.88	10.5	7.8	18.4	3.2	3.4	0.014	37	75
7.5	**132 SB**	131 002-••B	2855	87.0	0.90	13.9	8.5	25.1	3.4	3.6	0.016	42	73
11	**160 MA**	161 101-••D	2930	91.2	0.88	20	6.3	36	1.9	2.5	0.039	73	69
15	**160 M**	161 102-••D	2920	91.7	0.90	26.5	6.6	49	2.3	2.5	0.047	84	69
18.5	**160 L**	161 103-••D	2920	90.7	0.89	32	7.3	60	2.6	2.7	0.053	94	69
22	**180 M**	181 101-••D	2930	92.8	0.89	38.5	7.2	71	2.5	2.7	0.077	119	69
30	**MBT 200 LA**	AC 616 005-••	2945	91.1	0.89	53	6.5	97	2.6	3.0	0.142	172	75
37	**200 L**	616 006-••	2950	92.6	0.90	64	7.8	120	2.9	3.2	0.17	195	75
45	**225 M**	616 007-••	2950	92.1	0.89	79	7.1	146	2.2	3.1	0.284	225	76
55	**250 M**	616 008-••	2950	93.1	0.90	95	7.6	178	2.3	3.7	0.345	320	72
1500 r/min = 4 poles			**400 V 50 Hz**										
1.1	**M3AAD 90 S**	3GAA 092 001-••B	1410	77.5	0.81	2.6	5.0	7.5	2.2	2.7	0.0032	13	50
1.5	**90 L**	092 002-••B	1420	80.3	0.79	3.5	5.0	10	2.4	2.9	0.0043	16	50
2.2	**100 LA**	102 001-••B	1430	83.0	0.81	4.8	5.5	15	2.4	2.9	0.0069	21	64
3	**100 LB**	102 002-••B	1430	85.0	0.81	6.5	5.5	20	2.5	2.9	0.0082	24	66
4	**112 M**	112 001-••B	1435	84.5	0.80	8.6	7.0	26.6	2.9	3.1	0.015	27	60
5.5	**132 S**	132 001-••B	1450	87.0	0.83	11.1	7.3	36.2	2.2	3.0	0.031	40	66
7.5	**132 M**	132 002-••B	1450	88.0	0.83	14.8	7.9	49.4	2.5	3.2	0.038	48	66
11	**160 M**	162 101-••D	1460	90.3	0.81	21.5	6.7	72	2.9	2.8	0.067	75	62
15	**160 L**	162 102-••D	1455	91.1	0.84	28.5	6.8	98	3.0	2.8	0.091	94	62
18.5	**180 M**	182 101-••D	1470	92.3	0.84	35	7.0	120	3.1	2.7	0.161	124	62
22	**180 L**	182 102-••D	1470	92.4	0.83	41	7.0	143	2.9	2.8	0.191	141	63
30	**MBT 200 L**	AC 616 013-••	1480	91.7	0.82	57	7.6	194	2.6	2.9	0.31	192	68
37	**225 S**	616 014-••	1485	93.2	0.82	70	6.8	238	2.7	2.7	0.405	225	70
45	**225 M**	616 015-••	1485	93.7	0.83	83	7.3	289	2.8	2.9	0.495	250	66
55	**250 M**	616 016-••	1485	93.7	0.82	103	7.0	354	2.7	3.0	0.567	320	70

[1)] Motors are certified for the voltages 380-400 V 50 Hz according to IEC 34-1.
Values above are given for 400 V 50 Hz; data for any voltages < 500 V on request.

Notes:
When ordering motors, variant code 452 'DIP according to EN 50281-1-1, T= 125°C, category 3 D, IP 55' has to be added.

Data for other voltages and frequencies, on request.

The two bullets in the product code indicate choice of mounting arrangement (see ordering information), voltage and frequency (below).

S	D	E	F	G	H	X
380 VY 50 Hz 400 VY 50 Hz 220 VΔ 50 Hz 230 VΔ 50 Hz 440 VY 60 Hz	380 VΔ 50 Hz 400 VΔ 50 Hz 440 VΔ 60 Hz	500 VΔ 50 Hz	500 VY 50 Hz	415 VY 50 Hz	415 VΔ 50 Hz	Other rated voltage, connection or frequency, max. 500 V

Technical data – Dust ignition proof motors

Category 3 D - T125°C - IP 55
Aluminium frame, sizes 90 to 250

IC 411; Insulation class F, temperature rise class B

Output kW	Type designation	Product code	Speed r/min	Effi-ciency %	Power factor cos φ	Current I_N A	Current I_s/I_N	Torque T Nm	Torque T_s/T_N	Torque T_{max}/T_N	Moment of inertia J=1/4GD² kgm²	Weight kg	Sound pressure level LP dB(A)
1000 r/min = 6 poles			**400 V 50 Hz**										
0.75	**M3AAD 90 S**	3GAA 093 001-••B	930	71.5	0.67	2.4	4.0	7.5	1.9	2.3	0.0032	13	44
1.1	**90 L**	093 002-••B	930	74.4	0.69	3.3	4.0	11	1.9	2.3	0.0043	16	44
1.5	**100 L**	103 001-••B	950	80.0	0.71	3.9	4.5	15	1.9	2.3	0.0082	23	49
2.2	**112 M**	113 001-••B	940	80.5	0.74	5.4	5.6	22.3	2.1	2.7	0.015	27	66
3	**132 S**	133 001-••B	960	84.5	0.75	6.9	6.1	29.8	2.0	2.6	0.031	39	57
4	**132 MA**	133 002-••B	960	85.5	0.78	8.7	7.1	39.7	2.0	2.8	0.038	46	61
5.5	**132 MB**	133 003-••B	955	86.0	0.78	12	6.9	55	2.2	2.8	0.045	54	57
7.5	**160 M**	163 101-••D	970	89.3	0.79	15.4	6.7	74	2.0	2.8	0.089	88	59
11	**160 L**	163 102-••D	970	89.8	0.78	23	7.1	109	2.2	2.9	0.107	102	59
15	**180 L**	183 101-••D	970	90.8	0.78	31	7.0	148	2.1	3.0	0.217	151	59
18.5	**MBT 200 LA**	AC 616 020-••	980	89.5	0.80	37	6.4	180	2.1	3.0	0.315	192	68
22	**200 L**	616 021-••	980	89.5	0.80	45	7.4	214	2.3	3.1	0.34	202	65
30	**225 M**	616 022-••	985	91.5	0.83	57	6.5	291	1.7	3.1	0.766	235	68
37	**250 M**	616 023-••	985	92.0	0.82	71	6.5	359	1.9	3.3	0.88	330	69
750 r/min = 8 poles			**400 V 50 Hz**										
0.37	**M3AAD 90 S**	3GAA 094 001-••B	700	61.5	0.56	1.6	3.0	5	1.9	2.4	0.0032	13	43
0.55	**90 L**	094 002-••B	690	62.9	0.57	2.4	3.0	7.5	1.7	2.1	0.0043	16	43
0.75	**100 LA**	104 001-••B	700	72.0	0.59	2.6	3.5	10	2.1	2.7	0.0069	20	46
1.1	**100 LB**	104 002-••B	700	73.0	0.64	3.4	3.5	15	2.1	2.7	0.0082	23	46
1.5	**112 M**	114 001-••B	695	74.5	0.65	4.5	4.1	20.6	1.9	2.4	0.016	28	52
2.2	**132 S**	134 001-••B	720	80.5	0.67	5.9	5.3	29.2	1.6	2.5	0.038	46	56
3	**132 M**	134 002-••B	720	82.0	0.68	7.8	5.5	39.8	1.8	2.5	0.045	53	56
4	**160 MA**	164 101-••D	715	84.1	0.69	10	5.2	54	2.1	2.4	0.072	75	59
5.5	**160 M**	164 102-••D	710	84.7	0.70	13.4	5.4	74	2.4	2.6	0.091	88	59
7.5	**160 L**	164 103-••D	715	86.3	0.70	18.1	5.4	100	2.4	2.8	0.131	118	59
11	**180 L**	184 101-••D	720	88.7	0.76	23.5	5.9	146	2.4	2.6	0.224	147	59
15	**MBT 200 L**	AC 616 028-••	730	85.6	0.75	34	5.7	196	2.0	3.0	0.314	187	64
18.5	**225 S**	616 029-••	730	88.1	0.78	39	5.3	242	2.1	2.4	0.587	215	65
22	**225 M**	616 030-••	735	89.1	0.77	46	5.6	286	2.2	2.7	0.722	235	63
30	**250 M**	616 031-••	735	89.6	0.74	65	5.9	390	2.5	3.0	0.83	330	65

1) Motors are certified for the voltages 380-400 V 50 Hz according to IEC 34-1.
Values above are given for 400 V 50 Hz; data for any voltages < 500 V on request.

Notes:
When ordering motors, variant code 452 'DIP according to EN 50281-1-1, T= 125°C, category 3 D, IP 55' has to be added.

Data for other voltages and frequencies, on request.

The two bullets in the product code indicate choice of mounting arrangement (see ordering information), voltage and frequency (below).

S	D	E	F	G	H	X
380 VY 50 Hz 400 VY 50 Hz 220 VΔ 50 Hz 230 VΔ 50 Hz 440 VY 60 Hz	380 VΔ 50 Hz 400 VΔ 50 Hz 440 VΔ 60 Hz	500 VΔ 50 Hz	500 VY 50 Hz	415 VY 50 Hz	415 VΔ 50 Hz	Other rated voltage, connection or frequency, max. 500 V

Technical data – Dust ignition proof motors

Category 3 D - T125°C - IP 55
Cast iron frame, sizes 71 to 355

IC 411; Insulation class F, temperature rise class B

Output kW	Design	Type designation	Product code	Speed r/min	Efficiency %	Power factor cos φ	Current I_N A	Current I_s/I_N	Torque T Nm	Torque T_s/T_N	Torque T_{max}/T_N	Moment of inertia J=1/4GD² kgm²	Weight kg	Sound pressure level LP dB(A)
3000 r/min = 2 poles				**400 V 50 Hz [1]**										
0.37		**M2BA 71 M2 A**	3GBA 071 310-••A	2810	71.0	0.80	0.94	6.1	1.3	2.2	2.2	0.0003	10	56
0.55		**71 M2 B**	071 320-••A	2800	74.0	0.82	1.31	6.1	1.9	2.2	2.2	0.0004	11	56
0.75		**80 M2 A**	081 301-••A	2850	77.2	0.86	1.63	6.1	2.5	2.2	2.2	0.0009	16	57
1.1		**80 M2 B**	081 302-••A	2850	80.2	0.85	2.33	7.0	3.7	2.2	2.2	0.0009	17	58
1.5		**90 S2 A**	091 101-••A	2850	81.6	0.85	3.13	7.0	5	2.2	2.2	0.0014	21	61
2.2		**90 L2 A**	091 501-••A	2850	84.2	0.84	4.49	7.0	7.4	2.2	2.2	0.0016	24	61
3		**100 L2 A**	101 501-••A	2870	85.1	0.86	5.92	7.0	10	2.2	2.2	0.004	33	65
4		**112 M2 A**	111 301-••A	2900	86.0	0.89	7.52	7.0	13.2	2.2	2.2	0.0067	42	67
5.5		**132 S2 A**	131 101-••A	2920	88.6	0.88	10.2	7.0	18	2.2	2.2	0.0124	58	70
7.5		**132 S2 B**	131 102-••A	2920	89.9	0.89	13.5	7.0	24.5	2.2	2.2	0.0149	63	70
11		**M3GP 160 MLA**	3GGP 161 410-••G	2936	91.2	0.87	20	7.2	36	2.9	3.3	0.039	147	71
15		**160 MLB**	161 420-••G	2934	91.6	0.88	28	7.5	49	3.1	3.5	0.047	156	71
18.5		**160 MLC**	161 430-••G	2934	92.4	0.90	33	7.5	60	2.8	3.4	0.054	167	71
22	**HO**	**160 MLD**	161 440-••G	2929	91.4	0.90	39	7.4	72	2.8	3.4	0.059	173	77
22		**180 MLA**	181 410-••G	2938	92.6	0.90	39	6.9	72	2.5	3.1	0.077	194	71
30	**HO**	**180 MLB**	181 420-••G	2944	92.8	0.88	54	7.5	97	2.8	3.5	0.092	210	78
30		**200 MLA**	201 410-••G	2946	94.0	0.88	54	7.4	97	3.0	3.2	0.15	275	72
37		**200 MLC**	201 430-••G	2948	94.1	0.89	65	7.6	120	2.9	3.2	0.19	305	75
45		**225 SMB**	221 220-••G	2968	94.7	0.87	79	7.2	145	2.7	3.0	0.26	365	76
55	**HO**	**225 SMC**	221 230-••G	2965	94.3	0.88	96	7.1	177	2.6	3.0	0.29	385	80
55		**250 SMA**	251 210-••G	2970	94.6	0.88	96	7.7	177	2.4	3.1	0.49	425	75
75	**HO**	**250 SMB**	251 220-••G	2969	95.1	0.89	129	7.9	241	2.6	3.2	0.57	465	80
75		**M2BA 280 SMA**	3GBA 281 210-••A	2977	94.9	0.88	131	7.5	241	2.3	3.3	0.8	590	77
90		**280 SMB**	281 220-••A	2975	95.1	0.90	152	7.6	289	2.3	3.1	0.9	630	77
110		**315 SMA**	311 210-••A	2982	95.1	0.86	194	7.6	352	2.0	3.0	1.2	880	80
132		**315 SMB**	311 220-••A	2982	95.4	0.88	228	7.4	423	2.2	3.0	1.4	920	80
155		**315 SMC**	311 230-••A	2981	96.1	0.89	263	7.7	496	2.4	3.1	1.7	1010	80
180		**315 MLA**	311 410-••A	2980	96.0	0.88	298	8.5	577	2.8	3.1	2.1	1170	80
250		**355 S**	351 100-••A	2980	96.1	0.92	410	6.6	801	1.3	3.0	3.8	1550	83
315		**355 SMA**	351 210-••A	2978	96.6	0.92	510	7.7	1010	1.3	3.3	4.8	1750	83
345		**355 SMB**	351 220-••A	2975	96.4	0.92	563	7.3	1110	1.2	3.3	4.8	1750	83
400		**355 MLA**	351 410-••A	2982	96.6	0.92	655	7.7	1281	1.6	3.3	6	2150	83
430		**355 MLC**	351 430-••A	2978	96.6	0.92	700	8.2	1444	1.3	3.3	6	2150	83

[1] Motors are certified for the voltages 380-400-415 V 50 Hz according to IEC 34-1. Values above are given for 400 V 50 Hz; data for other voltages on request.

Design HO = High-output design. The output of these motors is one step higher than the basic with rated outputs in accordance with CENELEC.

Notes:
- **When ordering motors, variant code 452 'DIP according to EN 50281-1-1, T= 125°C, category 3 D, IP 55' has to be added.**
- **When ordering sizes 160-200 with lifetime lubrication, variant code 195 'Bearings greased for life' has to be added.**

Data for other voltages and frequencies, on request.

The two bullets in the product code indicate choice of mounting arrangement (see ordering information), voltage and frequency (below).

S	D	A [1]	B [1]	E	F [2]	X
380 VY 50 Hz 400 VY 50 Hz 415 VY 50 Hz 220 VΔ 50 Hz 230 VΔ 50 Hz 440 VY 60 Hz	380 VΔ 50 Hz 400 VΔ 50 Hz 415 VΔ 50 Hz 660 VY 50 Hz 690 VY 50 Hz 440 VΔ 60 Hz	380 VY 50 Hz 220 VΔ 50 Hz	380 VΔ 50 Hz 660 VY 50 Hz	500 VΔ 50 Hz 575 VΔ 60 Hz	500 VY 50 Hz	Other rated voltage, connection or frequency, max. 690 V
		G [1]	**H [1]**	**T [2]**	**U [2]**	
		415 VY 50 Hz	415 VΔ 50 Hz	660 VΔ 50 Hz	690 VΔ 50 Hz	

[1] On request for motor sizes 315-355. [2] On request for motor sizes 355.

Technical data – Dust ignition proof motors

Category 3 D - T125°C - IP 55
Cast iron frame, sizes 71 to 355

IC 411; Insulation class F, temperature rise class B

Output kW		De-sign	Type designation	Product code	Speed r/min	Effi-ciency %	Power factor cos φ	Current I_N A	Current $\frac{I_s}{I_N}$	Torque T Nm	Torque $\frac{T_s}{T_N}$	Torque $\frac{T_{max}}{T_N}$	Moment of inertia J=1/4GD² kgm²	Weight kg	Sound pressure level LP dB(A)
1500 r/min = 4 poles					**400 V 50 Hz [1]**										
0.25			**M2BA 71 M4 A**	3GBA 072 310-••A	1390	66.3	0.73	0.75	5.2	1.7	2.1	2.0	0.0005	11	43
0.37			**71 M4 B**	072 320-••A	1380	70.8	0.75	1.01	5.2	2.6	2.1	2.0	0.0007	11	45
0.55			**80 M4 A**	082 301-••A	1410	75.0	0.73	1.45	5.2	3.7	2.4	2.0	0.0014	16	46
0.75			**80 M4 B**	082 302-••A	1400	76.3	0.76	1.87	6.0	5.1	2.4	2.2	0.0017	17	46
1.1			**90 S4 A**	092 101-••A	1400	78.5	0.78	2.6	6.0	7.5	2.3	2.2	0.0025	21	52
1.5			**90 L4 A**	092 501-••A	1390	80.5	0.78	3.45	6.0	10.3	2.3	2.2	0.0032	25	52
2.2			**100 L4 A**	102 501-••A	1430	82.5	0.80	4.82	6.0	14.7	2.3	2.2	0.0068	32	53
3			**100 L4 B**	102 502-••A	1420	84.5	0.82	6.25	6.5	20.2	2.3	2.2	0.0086	36	53
4			**112 M4 A**	112 301-••A	1430	86.0	0.81	8.24	6.5	26.7	2.3	2.2	0.0131	45	56
5.5			**132 S4 A**	132 101-••A	1430	87.4	0.84	10.8	6.5	36.7	2.3	2.2	0.0267	60	59
7.5			**132 M4 A**	132 301-••A	1440	89.0	0.85	14.3	6.5	49.7	2.3	2.2	0.0343	73	59
11			**M3GP 160 MLC**	3GGP 162 430-••G	1470	91.3	0.82	22.5	7.7	71	3.1	3.6	0.09	166	65
15			**160 MLE**	162 450-••G	1467	92.0	0.83	30	7.6	98	3.1	3.6	0.121	189	67
18.5		**HO**	**160 MLF**	162 460-••G	1466	92.0	0.82	36.5	8.0	120	3.2	3.6	0.121	189	68
18.5			**180 MLA**	182 410-••G	1474	92.5	0.82	36	7.3	120	2.7	3.2	0.176	206	62
22			**180 MLB**	182 420-••G	1471	92.6	0.82	42	7.1	143	2.6	3.0	0.191	214	62
30	[2]	**HO**	**180 MLC**	182 430-••G	1473	92.3	0.80	59	7.8	194	3.1	3.4	0.239	233	66
30			**200 MLB**	202 420-••G	1475	93.5	0.84	56	7.4	194	3.3	3.0	0.34	305	61
37		**HO**	**200 MLC**	202 430-••G	1475	93.3	0.82	70	7.5	239	3.5	3.2	0.34	305	73
37			**225 SMB**	222 220-••G	1480	93.6	0.84	69	7.7	239	3.1	3.1	0.42	355	67
45			**225 SMC**	222 230-••G	1477	94.4	0.86	81	7.4	291	3.1	3.0	0.49	390	67
55		**HO**	**225 SMD**	222 240-••G	1476	94.0	0.85	100	7.6	356	3.3	3.1	0.49	390	74
55			**250 SMA**	252 210-••G	1479	94.6	0.83	101	6.9	355	2.5	3.1	0.72	415	66
75		**HO**	**250 SMB**	252 220-••G	1476	94.7	0.86	133	7.2	485	2.7	3.2	0.88	470	73
75			**M2BA 280 SMA**	3GBA 282 210-••A	1484	95.0	0.86	135	6.9	483	2.6	2.8	1.25	590	68
90			**280 SMB**	282 220-••A	1483	95.2	0.87	158	7.2	580	2.6	2.7	1.5	630	68
110			**315 SMA**	312 210-••A	1487	95.6	0.87	192	7.2	706	2.0	2.5	2.3	870	70
132			**315 SMB**	312 220-••A	1487	95.8	0.87	232	7.1	848	2.3	2.7	2.6	925	70
155			**315 SMC**	312 230-••A	1487	96.0	0.86	276	7.3	995	2.5	3.0	2.9	970	70
185			**315 MLA**	312 410-••A	1487	96.2	0.86	325	7.7	1188	2.7	3.1	3.5	1080	70
250			**355 S**	352 100-••A	1487	96.5	0.87	430	7.2	1606	2.3	2.7	6.5	1550	80
315			**355 SMA**	352 210-••A	1488	96.7	0.87	545	7.6	2022	2.5	2.9	8.2	1800	80
345			**355 SMB**	352 220-••A	1486	96.7	0.87	590	7.0	2217	2.3	2.7	8.2	1800	80
400			**355 MLA**	352 410-••A	1489	96.8	0.87	685	6.9	2565	1.6	2.8	10	2100	80
450			**355 MLB**	352 420-••A	1489	96.8	0.87	770	7.6	2886	1.5	3.0	10	2100	80
500			**355 MLC**	352 430-••A	1489	96.8	0.88	845	7.6	3207	1.3	2.9	10.5	2100	83

[1] Motors are certified for the voltages 380-400-415 V 50 Hz according to IEC 34-1. Values above are given for 400 V 50 Hz; data for other voltages on request.
[2] Temperature rise class F.

Design HO = High-output design. The output of these motors is one step higher than the basic with rated outputs in accordance with CENELEC.

Notes:
- **When ordering motors, variant code 453 'DIP according to EN 50281-1-1, T= 125°C, category 2 D, IP 65' has to be added.**
- **When ordering sizes 160-200 with lifetime lubrication, variant code 195 'Bearings greased for life' has to be added.**

Data for other voltages and frequencies, on request.

The two bullets in the product code indicate choice of mounting arrangement (see ordering information), voltage and frequency (below).

S	D	A [1]	B [1]	E	F [2]	X
380 VY 50 Hz	380 VΔ 50 Hz	380 VY 50 Hz	380 VΔ 50 Hz	500 VΔ 50 Hz	500 VY 50 Hz	Other rated voltage, connection or frequency, max. 690 V
400 VY 50 Hz	400 VΔ 50 Hz	220 VΔ 50 Hz	660 VY 50 Hz	575 VΔ 60 Hz		
415 VY 50 Hz	415 VΔ 50 Hz					
220 VΔ 50 Hz	660 VY 50 Hz	**G [1]**	**H [1]**	**T [2]**	**U [2]**	
230 VΔ 50 Hz	690 VY 50 Hz	415 VY 50 Hz	415 VΔ 50 Hz	660 VΔ 50 Hz	690 VΔ 50 Hz	
440 VY 60 Hz	440 VΔ 60 Hz					

[1] On request for motor sizes 315-355. [2] On request for motor sizes 355.

Technical data – Dust ignition proof motors

Category 3 D - T125°C - IP 55
Cast iron frame, sizes 71 to 355

IC 411; Insulation class F, temperature rise class B

Output kW	De-sign	Type designation	Product code	Speed r/min	Effi-ciency %	Power factor cos φ	Current I_N A	Current $\frac{I_s}{I_N}$	Torque T Nm	Torque $\frac{T_s}{T_N}$	Torque $\frac{T_{max}}{T_N}$	Moment of inertia J=1/4GD² kgm²	Weight kg	Sound pressure level LP dB(A)
1000 r/min = 6 poles				**400 V 50 Hz [1]**										
0.18		**M2BA 71 M6 A**	3GBA 073 310-••A	880	57.0	0.63	0.73	4.0	1.95	1.7	1.8	0.0006	10	42
0.25		**71 M6 B**	073 320-••A	880	61.5	0.65	0.91	4.0	2.71	1.7	1.8	0.0007	11	42
0.37		**80 M6 A**	083 301-••A	920	68.0	0.65	1.21	5.0	3.84	1.7	1.8	0.0016	17	45
0.55		**80 M6 B**	083 302-••A	920	70.0	0.66	1.72	5.0	5.71	1.7	1.8	0.002	18	45
0.75		**90 S6 A**	093 101-••A	920	74.0	0.71	2.08	5.0	7.79	2.0	2.2	0.0029	21	48
1.1		**90 L6 A**	093 501-••A	920	75.0	0.73	2.9	5.0	11.4	2.0	2.2	0.0038	25	48
1.5		**100 L6 A**	103 501-••A	930	79.0	0.73	3.76	5.5	15.4	2.0	2.2	0.001	32	51
2.2		**112 M6 A**	113 301-••A	940	83.0	0.73	5.24	5.5	22.4	2.0	2.2	0.0156	40	54
3		**132 S6 A**	133 101-••A	960	84.5	0.77	6.67	6.5	29.8	2.0	2.2	0.0312	55	56
4		**132 M6 A**	133 301-••A	960	85.0	0.76	8.94	6.5	39.8	2.0	2.2	0.0407	65	56
5.5		**132 M6 B**	133 302-••A	950	87.0	0.78	11.7	6.5	55	2.0	2.2	0.0533	75	56
7.5		**M3GP 160 MLA**	3GGP 163 410-••G	965	88.6	0.80	15.5	6.5	74	1.9	3.0	0.088	160	57
11		**160 MLB**	163 420-••G	966	89.2	0.79	23	7.1	109	2.1	3.3	0.106	173	65
14	**[2][3] HO**	**160 MLC**	163 430-••G	969	88.9	0.74	31	7.9	138	2.8	3.9	0.121	188	64
15		**180 MLB**	183 420-••G	970	90.7	0.79	31	6.6	148	1.6	2.8	0.221	233	67
18.5		**200 MLA**	203 410-••G	983	91.3	0.80	37	7.1	180	3.2	3.1	0.37	265	66
22		**200 MLB**	203 420-••G	983	91.6	0.81	43	7.5	214	3.2	3.2	0.43	285	61
30	**HO**	**200 MLC**	203 430-••G	983	91.6	0.80	60	7.5	292	3.5	3.4	0.49	305	65
30		**225 SMB**	223 220-••G	985	92.8	0.81	58	7.4	291	3.4	3.0	0.64	350	61
37	**HO**	**225 SMC**	223 230-••G	983	92.8	0.83	70	7.1	359	3.2	2.8	0.75	380	64
37		**250 SMA**	253 210-••G	987	93.4	0.81	71	7.2	358	3.2	2.9	1.16	420	66
45	**HO**	**250 SMB**	253 220-••G	987	93.6	0.82	84	7.5	435	3.2	2.8	1.49	465	66
45		**M2BA 280 SMA**	3GBA 283 210-••A	990	94.5	0.84	82	6.7	434	2.5	2.4	1.85	570	66
55		**280 SMB**	283 220-••A	990	94.7	0.84	101	7.0	531	2.7	2.6	2.2	610	66
75		**315 SMA**	313 210-••A	992	94.5	0.81	141	7.4	722	2.4	2.8	3.2	820	68
90		**315 SMB**	313 220-••A	992	95.5	0.84	163	7.5	866	2.4	2.8	4.1	910	68
110		**315 SMC**	313 230-••A	991	95.6	0.83	202	7.4	1060	2.5	2.9	4.9	980	68
132		**315 MLA**	313 410-••A	991	95.8	0.83	240	7.5	1272	2.7	3.0	5.8	1100	68
160		**355 S**	353 100-••A	992	95.9	0.85	280	6.8	1540	1.8	2.7	10.4	1500	75
200		**355 SMA**	353 210-••A	992	95.9	0.85	355	7.1	1925	2.0	2.7	12.5	1800	75
250		**355 SMB**	353 220-••A	992	96.0	0.84	450	7.5	2407	2.2	2.8	12.5	1800	75
305		**355 MLA**	353 410-••A	991	96.2	0.84	550	7.5	2940	2.1	3.1	14.6	2100	75
355		**355 MLC**	353 430-••A	991	96.4	0.84	635	7.6	3421	1.5	3.0	15.8	2100	78

[1] Motors are certified for the voltages 380-400-415 V 50 Hz according to IEC 34-1. Values above are given for 400 V 50 Hz; data for other voltages on request.
[2] Temperature rise class F.
[3] Nominal power lower than Cenelec +1.

Design HO = High-output design. The output of these motors is one step higher than the basic with rated outputs in accordance with CENELEC.

Notes:
- **When ordering motors, variant code 453 'DIP according to EN 50281-1-1, T= 125°C, category 2 D, IP 65' has to be added.**
- **When ordering sizes 160-200 with lifetime lubrication, variant code 195 'Bearings greased for life' has to be added.**

Data for other voltages and frequencies, on request.

Technical data – Dust ignition proof motors

Category 3 D - T125°C - IP 55
Cast iron frame, sizes 71 to 355

IC 411; Insulation class F, temperature rise class B

Output kW	Design	Type designation	Product code	Speed r/min	Efficiency %	Power factor cos φ	Current I_N A	Current $\frac{I_s}{I_N}$	Torque T Nm	Torque $\frac{T_s}{T_N}$	Torque $\frac{T_{max}}{T_N}$	Moment of inertia J=1/4GD² kgm²	Weight kg	Sound pressure level LP dB(A)
750 r/min = 8 poles				**400 V 50 Hz [1]**										
4		**M3GP 160 MLA**	3GGP 164 410-••G	717	83.0	0.70	10.1	5.2	53	1.8	2.8	0.071	146	59
5.5		**160 MLB**	164 420-••G	713	83.2	0.70	13.5	5.1	74	1.9	2.6	0.09	160	60
7.5		**160 MLC**	164 430-••G	714	85.5	0.70	18.4	5.7	100	1.8	2.9	0.121	188	60
11		**180 MLB**	184 420-••G	726	90.0	0.75	24	5.7	145	1.6	2.7	0.239	227	63
15		**200 MLA**	204 410-••G	735	90.2	0.78	31	7.2	195	2.5	3.3	0.45	280	64
18.5	**HO**	**200 MLB**	204 420-••G	734	90.2	0.79	37	7.2	241	2.4	3.2	0.54	300	64
18.5		**225 SMA**	224 210-••G	734	91.0	0.75	40	6.6	241	2.0	3.0	0.61	335	61
22		**225 SMB**	224 220-••G	733	91.2	0.78	46	6.2	287	1.9	2.7	0.68	350	61
30	**HO**	**225 SMC**	224 230-••G	733	91.1	0.76	62	6.5	391	2.0	3.0	0.75	375	65
30		**250 SMA**	254 210-••G	736	91.8	0.78	61	6.8	389	2.1	3.0	1.25	420	61
37	**HO**	**250 SMB**	254 220-••G	737	92.5	0.77	75	7.6	479	2.3	3.4	1.52	465	65
37		**M2BA 280 SMA**	3GBA 284 210-••A	741	93.4	0.78	74	7.3	477	1.8	3.1	1.85	570	65
45		**280 SMB**	284 220-••A	741	94.0	0.78	90	7.6	580	1.9	3.2	2.2	610	65
55		**315 SMA**	314 210-••A	740	94.3	0.81	104	7.1	710	1.6	2.7	3.2	820	62
75		**315 SMB**	314 220-••A	740	94.8	0.82	140	7.1	968	1.7	2.7	4.1	910	65
90		**315 SMC**	314 230-••A	740	95.1	0.82	167	7.4	1161	1.8	2.7	4.9	980	65
110		**315 MLA**	314 410-••A	740	95.2	0.83	202	7.3	1420	1.8	2.7	5.8	1100	72
132		**355 S**	354 100-••A	742	95.0	0.80	250	5.8	1699	1.5	2.3	10.4	1550	75
160		**355 SMA**	354 210-••A	742	95.2	0.80	305	6.3	2059	1.7	2.4	12.5	1800	75
200		**355 MLA**	354 410-••A	743	95.5	0.77	395	6.6	2571	1.8	2.7	14.6	2100	75
250		**355 MLC**	354 430-••A	744	95.7	0.80	470	6.6	3209	1.5	3.0	15.8	2100	75

[1] Motors are certified for the voltages 380-400-415 V 50 Hz according to IEC 34-1. Values above are given for 400 V 50 Hz; data for other voltages on request.

Design HO = High-output design. The output of these motors is one step higher than the basic with rated outputs in accordance with CENELEC.

Notes:
- **When ordering motors, variant code 453 'DIP according to EN 50281-1-1, T= 125°C, category 2 D, IP 65' has to be added.**
- **When ordering sizes 160-200 with lifetime lubrication, variant code 195 'Bearings greased for life' has to be added.**

Data for other voltages and frequencies, on request.

The two bullets in the product code indicate choice of mounting arrangement (see ordering information), voltage and frequency (below).

S	D	A [1]	B [1]	E	F [2]	X
380 VY 50 Hz	380 VΔ 50 Hz	380 VY 50 Hz	380 VΔ 50 Hz	500 VΔ 50 Hz	500 VY 50 Hz	Other rated voltage, connection or frequency, max. 690 V
400 VY 50 Hz	400 VΔ 50 Hz	220 VΔ 50 Hz	660 VY 50 Hz	575 VΔ 60 Hz		
415 VY 50 Hz	415 VΔ 50 Hz					
220 VΔ 50 Hz	660 VY 50 Hz	**G [1]**	**H [1]**	**T [2]**	**U [2]**	
230 VΔ 50 Hz	690 VY 50 Hz	415 VY 50 Hz	415 VΔ 50 Hz	660 VΔ 50 Hz	690 VΔ 50 Hz	
440 VY 60 Hz	440 VΔ 60 Hz					

[1] On request for motor sizes 315-355. [2] On request for motor sizes 355.

Rating plates

For motor sizes 80 to 132 the rating plate gives one current value for the voltage area. That is the highest current that can occur within the voltage area with the given output.

For cast iron motor sizes 160 to 400 the rating plate is in table form giving values for speed, current and power factor for six voltages.

European standards require a special marking on dust ignition proof motors. The marking shall include the following:
- type of protection
- apparatus category
- temperature class
- name and EC reference number of the notified body
- certificate number

M3AAD 90-132

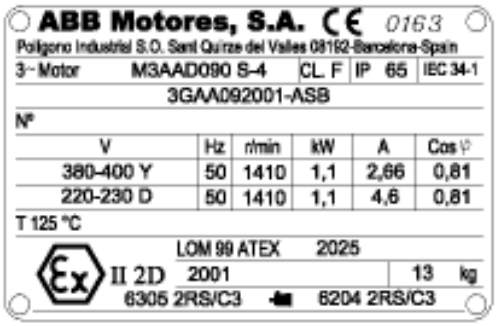

M3AAD 160-180

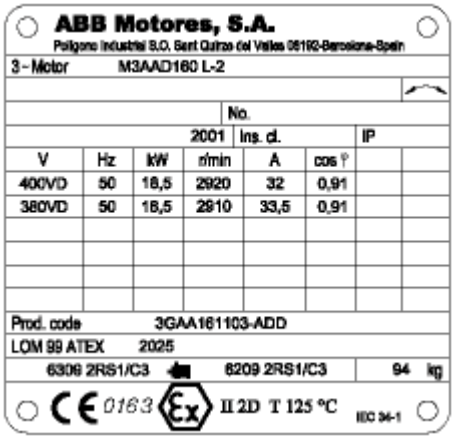

MBT 200-250

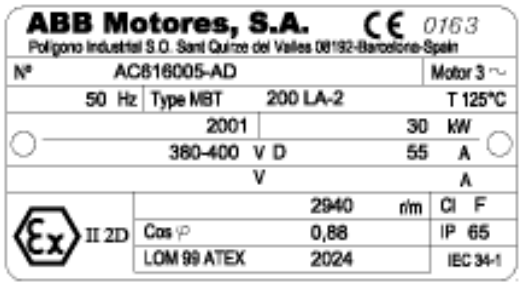

M2BA 80-132

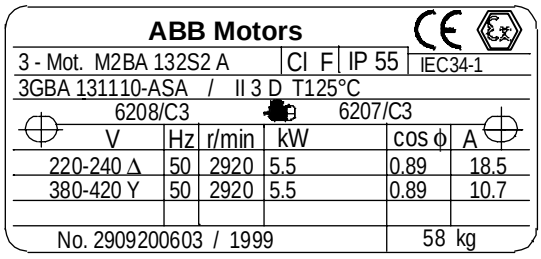

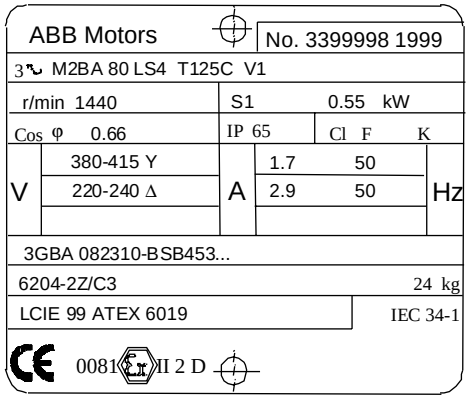

M3GP/M2BA 160-355

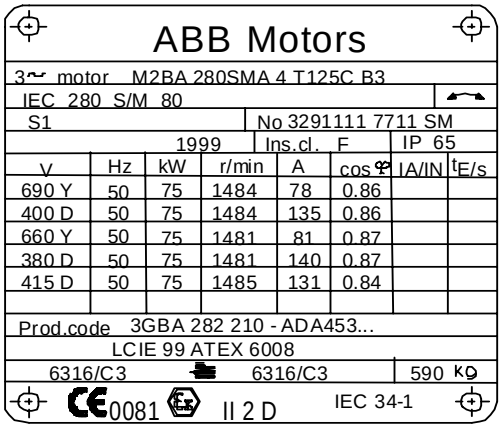

Variant codes - DIP motors

Variant codes / DIP-motors		Aluminium motors			Cast iron motors				
Code [1]	Variant	90-132	160-180	200-250	71 132 3D	80-132 2D	160-250	280-315	355-400
Balancing									
052	Balancing to grade R (ISO 2373).	T	T	T	L	T	T	T	T
417	Balancing to grade S (ISO 2373).	T	–	R	L	T	T	T	T
424	Full key balancing.	T	T	T	–	T	T	T	T
Bearings and lubrication									
036	Transport lock for bearings.	–	L	L	–	–	T	L	L
037	Roller bearing at D-end.	–	L	L	–	–	T	L	L
039	Cold resistant grease (-55...+100°C).	L	L	L	L	L	L	L	L
040	Heat resistant grease (-25...+150°C).	S	L	L	L	L	S	S	S
041	Bearings regreasable via grease nipples.	–	L	S	–	–	S	S	S
194	2Z-bearings at both ends. Cast iron motor sizes 160-250 available as stocked option with lifetime bearings.	–	–	–	–	–	S	S	S
195	Bearings greased for life. Cast iron motor sizes 160-250 available as stocked option with lifetime bearings.	S	S	L	–	–	S	S	S
042	Internal bearing cover, locked D-end. Standard for sizes M2AA 90-100 and flange-mounted M2AA 112-132, M2BA 160-180.	L	S	L	–	R	S	S	S
043	SPM-nipples.	–	L	L	L	–	S	L	S
107	Bearing mounted PT100 resistance elements.	–	–	–	–	–	T	T	T
420	Bearing mounted PTC thermistors.	–	–	–	–	–	T	T	T
433	Grease relief. Flange-mounted cast iron motors 160-180 not possible.	–	–	–	–	–	T	T	T
Branch standard designs									
178	Stainless steel/acid proof bolts.	L	L	L	L	L	T	T	T
425	Corrosion protected stator and rotor core.	R	–	–	–	–	–	T	T
432	Copper bar rotor.	–	–	–	–	–	–	T	T
Cooling system									
053	Metal fan cover.	L	S	S	S	S	S	S	S
068	Metal fan.	S	S	S	S	S	S	S	S
075	Cooling method IC 418 (without fan).	–	R	R	R	R	R	T	T
183	Separate motor cooling (fan axial, N-end).	–	–	–	–	–	R	T	T
422	Separate motor cooling (fan top or side, N-end).	–	–	–	–	–	–	T	T
791	Stainless steel fan cover.	–	–	–	–	–	R	R	R
Coupling									
035	Assembly of customer supplied coupling-half.	–	–	–	R	R	R	L	L
Drain holes									
	Note: DIP motors are equipped with drain holes in category 3D.								
065	Plugged drain holes.	–	–	–	–	–	L	L	L
066	Modified drain hole position (for specified IM xxxx).	–	–	–	L	–	L	L	L
076	Draining holes with plugs.	–	–	–	–	–	S	S	S
Earthing bolt									
067	External earthing bolt.	S	S	S	S	S	S	S	S

[1] = Certain variant codes cannot be used together
R = On request
S = Included as standard
L = Modification of stocked motor or during new production
T = With new production only

Variant codes / DIP-motors		Aluminium motors			Cast iron motors				
Code [1]	Variant	90-132	160-180	200-250	71 132 3D	80-132 2D	160-250	280-315	355-400
Heating elements									
450	Heating element, 110-120 V.	R	R	R	R	T	T	T	T
451	Heating element, 220-240 V.	R	R	R	R	T	T	L	L
Insulation system									
014	Winding insulation class H.	R	R	R	–	–	–	T	T
405	Special winding insulation for frequency converter supply.	–	–	–	–	–	–	T	T
Mounting arrangements									
008	IM 2101 foot/flange mounted, IEC flange, from IM 1001 (B34 from B3).	L	–	–	L	L	–	–	–
009	IM 2001 foot/flange mounted, IEC flange, from IM 1001 (B35 from B3).	L	L	L	L	L	L	L	L
047	IM 3601 flange mounted, IEC flange, from IM 3001 (B14 from B5), flange mounted with large flange. Small flange with tapped holes.	–	–	–	L	L	–	–	–
048	IM 3001 flange mounted, IEC flange, from IM 3601 (B5 from B14), flange mounted with small flange. Large flange with clearance holes.	–	–	–	–	L	–	–	–
078	(IM 3601) flange mounted, DIN C-flange. Small flange with tapped holes. Larger flange than standard version.	L	–	–	–	–	–	–	–
080	(IM 3001) flange mounted, DIN A-flange. Large flange with clearance holes. Larger flange than standard version.	L	–	–	L	–	–	–	–
090	(IM 2101) foot/flange mounted, DIN C-flange, from IM 1001 (B34 from B3). Small flange with tapped holes. Larger flange than standard version.	L	–	–	L	–	–	–	–
091	(IM 2001) foot/flange mounted, DIN A-flange, from IM 1001 (B35 from B3). Large flange with clearance holes. Larger flange than standard version.	L	–	–	L	–	–	–	–
Painting									
114	Special paint colour, standard grade.	L	L	L	L	L	L	L	L
115	Offshore, zinc primer painting.	L	L	L	L	L	L	L	L
179	Special paint specification.	R	R	R	R	R	R	R	R
Protection									
005	Protective roof, vertical motor, shaft down.	L	L	L	L	L	L	L	L
401	Protective roof, horizontal motor.	–	–	–	R	R	T	T	T
Rating & instruction plates									
002	Restamping voltage, frequency and output, continuous duty.	L	L	L	R	R	R	R	R
138	Mounting of additional identification plate.	L	L	L	L	L	L	L	L
150	Instruction plates and maintenance instructions in non-standard language.	R	R	R	R	R	R	R	R
161	Additional rating plate delivered loose.	L	R	R	L	L	L	L	L
Shaft & rotor									
069	Two shaft extensions as per basic catalogue.	T	T	T	–	T	T	T	T
070	One or two special shaft extensions, standard shaft material.	T	T	T	–	R	T	T	T
155	Cylindrical shaft extension, D-end, without key-way.	T	–	–	–	R	T	T	T
156	Cylindrical shaft extension, N-end, without key-way.	T	–	–	–	R	T	T	T
410	Stainless/acid-proof steel shaft (standard or non-standard design).	T	T	T	–	–	T	T	T

[1] = Certain variant codes cannot be used together
R = On request
S = Included as standard
L = Modification of stocked motor or during new production
T = With new production only

Variant codes / DIP-motors		Aluminium motors			Cast iron motors				
Code [1]	Variant	90-132	160-180	200-250	71 132 3D	80-132 2D	160-250	280-315	355-400
Standards and regulations									
152	Classified shaft material.	–	–	–	–	T	T	T	T
153	Reduced test for classification society.	–	–	–	R	R	R	L	L
Stator winding temperature sensors									
435	PTC - thermistors (3 in series), 130°C, in stator winding.	R	R	R	T	T	T	L	L
436	PTC - thermistors (3 in series), 150°C, in stator winding.	S	S	S	S	S	S	S	S
439	PTC - thermistors (2x3 in series), 150°C, in stator winding.	R	R	R	T	T	T	L	L
441	PTC - thermistors (3 in series 130°C & 3 in series 150°C), in stator winding.	R	R	R	T	T	T	L	L
442	PTC - thermistors (3 in series 150°C & 3 in series 170°C), in stator winding.	–	–	–	–	–	T	L	L
445	PT100 resistance element (1 per phase) in stator winding.	–	–	–	–	–	T	L	L
445	PT100 resistance element (2 per phase) in stator winding.	–	R	R	–	–	T	L	L
Terminal box									
015	D connection in terminal box (reconnection from Y).	L	L	L	L	L	L	L	L
017	Y connection in terminal box (reconnection from D).	L	L	L	L	L	L	L	L
230	Standard cable glands.	–	–	–	R	L	S	S	S
400	4 x 90 degr turnable terminal box. Cast iron sizes 200-250 = S	–	–	–	–	–	T	T	T
413	Extended cable connection, no terminal box.	R	–	–	–	R	R	T	T
418	Separate terminal box for temperature detectors.	–	R	R	–	–	T	T	T
468	Non-standard cable entry direction (please state cable direction).	–	–	–	L	L	T	T	T
469	Axial cable entry direction.	–	–	–	L	L	T	T	T
737	Standard cable gland, EEx e II with clamping device, fulfilling EN 50014 and 50019.	–	–	–	R	L	L	L	L
Testing									
145	Type test report from test of identical motor.	R	L	L	R	R	R	R	R
146	Type test with report for motor from specific delivery batch.	T	L	L	R	T	T	T	T
147	Type test with report for motor from specific delivery batch, customer witnessed.	T	L	L	R	T	T	T	T
148	Routine test report.	R	L	L	L	L	L	L	L
149	Testing according to separate test specification.	R	L	L	R	L	L	L	L
760	Vibration level test.	–	R	R	R	L	L	L	L
761	Vibration spectrum test.	–	R	R	–	–	L	L	L
762	Noise level test.	–	R	R	R	L	L	L	L
763	Noise spectrum test.	–	R	R	–	L	L	L	L
764	Complete test with ABB frequency converter.	–	R	R	R	R	R	R	R

[1] = Certain variant codes cannot be used together
R = On request
S = Included as standard
L = Modification of stocked motor or during new production
T = With new production only

Variant codes / DIP-motors		Aluminium motors			Cast iron motors				
Code [1]	Variant	90-132	160-180	200-250	71 132 3D	80-132 2D	160-250	280-315	355-400
Variable speed drives									
181	Adapted for frequency converter, variable speed operation.	–	–	–	R	R	R	R	R
701	Insulated bearing at N-end. Note: In variable speed drives all Ex-motors size 280 and above must be equipped with insulated bearings.	–	–	–	–	–	–	T	T
704	EMC cable gland.	–	–	–	T	T	T	T	T
Separate cooling									
183	Separate motor cooling (fan axial, N-end).	–	–	–	–	–	T	T	T
422	Separate motor cooling (fan top or side, N-end).	–	–	–	–	–	–	T	T
Tacho									
182	Pulse sensor mounted as specified (Leine&Linde equivalent), hollow-shaft type). Assembly of customer supplied tacho.	–	–	–	–	–	R	R	R
479	Mounting of other type of pulse tacho with shaft extension.	–	–	–	–	–	R	R	R
472	1024 pulse tacho (Leine & Linde equivalent) mounted.	–	–	–	–	–	R	R	R
473	2048 pulse tacho (Leine & Linde equivalent) mounted.	–	–	–	–	–	R	R	R
Separate motor cooling & tacho									
486	Separate motor cooling (fan top, N-end) and prepared fo DC-tacho.	–	–	–	–	–	–	R	R
476	Separate motor cooling (fan axial, N-end) and 1024 pulse tacho (Leine & Linde equivalent) mounted.	–	–	–	–	–	R	R	R
477	Separate motor cooling (fan axial, N-end) and 2048 pulse tacho (Leine & Linde equivalent) mounted.	–	–	–	–	–	R	R	R
Y/Δ-starting									
117	Terminals for Y/Δ start at both speeds (two-speed windings).	–	T	T	–	–	–	T	T
118	Terminals for Y/Δ start at high speed (two-speed windings).	–	–	–	–	–	–	T	T
119	Terminals for Y/Δ start at low speed (two-speed windings).	–	–	–	–	–	–	T	T

[1] = Certain variant codes cannot be used together
R = On request
S = Included as standard
L = Modification of stocked motor or during new production
T = With new production only

Dimension drawings

Category 2 D & 3 D - DIP motors aluminium frame

Foot-mounted motor IM 1001, IM B3

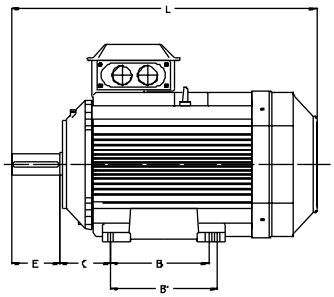

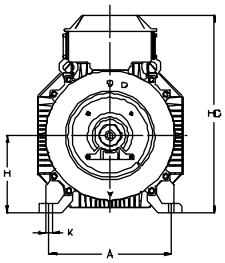

Flange-mounted motor IM 3001, IM B5

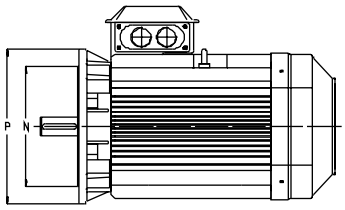

Shaft extension

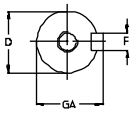

Sizes 90-180

Flanges

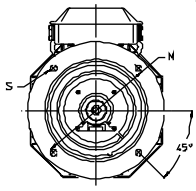

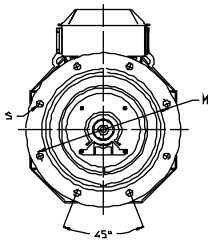

Sizes 200-250

	IM 1001, IM B3 AND IM 3001, IM B5										IM 1001, IM B3							IM 3001, IM B5			
Motor size	D poles		GA poles		F poles		E poles		L max poles		A	B	B'	C	HD	K	H	M	N	P	S
	2	4-8	2	4-8	2	4-8	2	4-8	2	4-8											
90 S	24	24	27	27	8	8	50	50	295	295	140	100	–	56	212	10	90	165	130	200	12
90 L	24	24	27	27	8	8	50	50	320	320	140	125	–	56	212	10	90	165	130	200	12
100 L	28	28	31	31	8	8	60	60	358.5	358.5	160	140	–	63	236	12	100	215	180	250	15
112 M	28	28	31	31	8	8	60	60	361	361	190	140	–	70	258	12	112	215	180	250	14.5
132	38	38	41	41	10	10	80	60	447	447	216	140	178	89	295.5	12	132	265	230	300	14.5
160 M	42	42	45	45	12	12	110	110	602.5	602.5	254	210	254	108	368.5	15	160	300	250	350	19
160 L	42	42	45	45	12	12	110	110	643.5	643.5	254	210	254	108	368.5	15	160	300	250	350	19
180 M	48	48	51.5	51.5	14	14	110	110	680	680	279	241	279	121	403.5	15	180	300	250	350	19
180 L	48	48	51.5	51.5	14	14	110	110	700.5	700.5	279	241	279	121	403.5	15	180	300	250	350	19
200	55	55	59	59	16	16	110	110	773	773	318	267	305	133	496.5	18	200	350	300	400	19
225	55	60	59	64	16	18	110	140	835	865	356	286	311	149	542	18	225	400	350	450	19
250	60	65	64	69	18	18	140	140	872	872	406	311	349	168	590	22	250	500	450	550	19

Above table gives the main dimensions in mm.

For detailed drawings please our web-pages 'www.abb.com/motors&drives' or contact ABB Motors.

Dimension drawings

Category 2 D - DIP motors cast iron frame

Foot-mounted motor IM 1001, IM B3 Flange-mounted motor IM 3001, IM B5

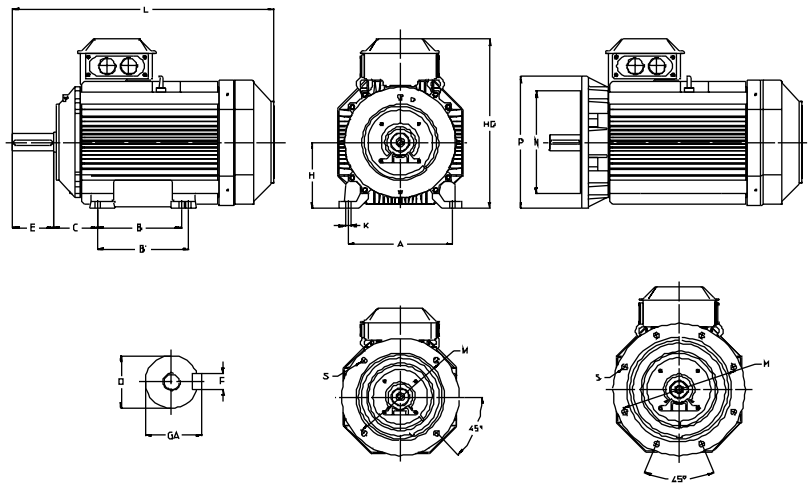

Sizes 71-200 Sizes 225-355

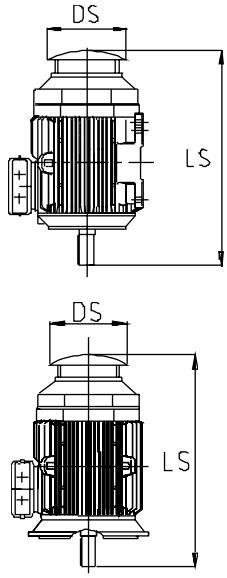

Protective roof, variant code 005

	IM 1001, IM B3 AND IM 3001, IM B5										IM 1001, IM B3							IM 3001, IM B5				Protective roof		
Motor size	D poles 2	4-8	GA poles 2	4-8	F poles 2	4-8	E poles 2	4-8	L max poles 2	4-8	A	B	B'	C	H	HD	K	M	N	P	S	DS	LS poles 2	4-8
80	19	19	21.5	21.5	6	6	40	40	287	287	125	100	–	50	80	250	9.5	165	130	200	11	150	306	306
90 S	24	24	27	27	8	8	50	50	336	336	140	100	125	56	90	275	9.5	165	130	200	11	170	360	360
90 L	24	24	27	27	8	8	50	50	336	336	140	125	125	56	90	275	9.5	165	130	200	11	170	360	360
100	28	28	31	31	8	8	60	60	399	399	160	140	–	63	100	294	11	215	180	250	13	188	444	444
112	28	28	31	31	8	8	60	60	419	419	190	140	–	70	112	306	11	215	180	250	13	188	444	444
132 S	38	38	41	41	10	10	80	80	512	512	216	140	178	89	132	351	11	265	230	300	14	255	548	548
132 M	38	38	41	41	10	10	80	80	512	512	216	178	178	89	132	351	11	265	230	300	14	255	548	548
160	42	42	45	45	12	12	110	110	711	711	254	210	254	108	160	388	14.5	300	250	350	18.5	328	756	756
180	48	48	51.5	51.5	14	14	110	110	706	706	279	241	279	121	180	426	14.5	300	250	350	18.5	359	756	756
200	55	55	59	59	16	16	110	110	774	774	318	267	305	133	200	536	18.5	350	300	400	18.5	414	844	844
225	55	60	59	64	16	18	110	140	841	871	356	286	311	149	225	583	18.5	400	350	450	18.5	462	921	951
250	60	65	64	69	18	18	140	140	875	875	406	311	349	168	250	646	24	500	450	550	18.5	506	965	965
280 SM	65	75	69	79.5	18	20	140	140	1088	1088	457	368	419	190	280	745	24	500	450	550	18	460	1190	1190
315 SM	65	80	69	85	18	22	140	170	1173	1203	508	406	457	216	315	840	30	600	550	660	23	520	1290	1320
315 ML	65	90	69	95	18	25	140	170	1224	1254	508	457	508	216	315	840	30	600	550	660	23	520	1345	1375
355 S	70	100	74.5	106	20	28	140	210	1344	1414	610	500	–	254	355	955	35	740	680	800	23	590	1480	1550
355 SM	70	100	74.5	106	20	28	140	210	1396	1466	610	500	560	254	355	955	35	740	680	800	23	590	1530	1600
355 ML	70	100	74.5	106	20	28	140	210	1501	1571	610	560	630	254	355	955	35	740	680	800	23	590	1635	1705

IM 3601, IM B14 - Available flange alternatives ; see also variant codes.

Flange size	Flange dimensions P	M	N	S	Motor size 80	90	100	112	132
FT100	120	100	80	M8	S	NA	NA	NA	NA
FT115	140	115	95	M8	R	S	NA	NA	NA
FT130	160	130	110	M8	R	R	S	S	NA
FT165	200	165	130	M10	NA	NA	NA	NA	S
FT215	250	215	180	M12	NA	NA	R	R	R
FT265	300	265	230	M12	NA	NA	NA	NA	R

S = Standard flange
R = Special flange
NA = Not possible

Tolerances:

A, B	± 0,8
D, DA	ISO k6 < Ø 50mm
	ISO m6 > Ø 50mm
F, FA	ISO h9
H	+0 -0.5
N	ISO j6
C, CA	± 0.8

Above table gives the main dimensions in mm.

For detailed drawings please our web-pages 'www.abb.com/motors&drives' or contact ABB Motors.

Dimension drawings

Category 3 D - DIP motors cast iron frame

Foot-mounted motor IM 1001, IM B3 Flange-mounted motor IM 3001, IM B5

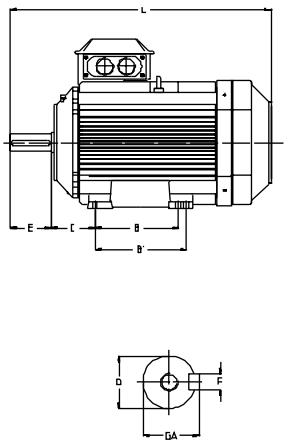

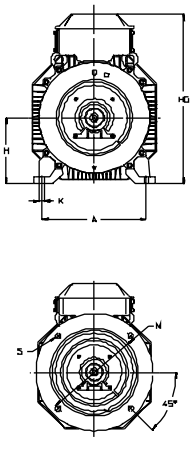

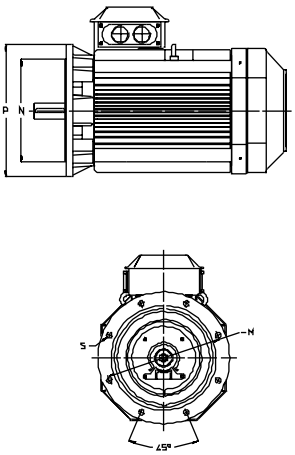

Sizes 71-200 Sizes 225-355

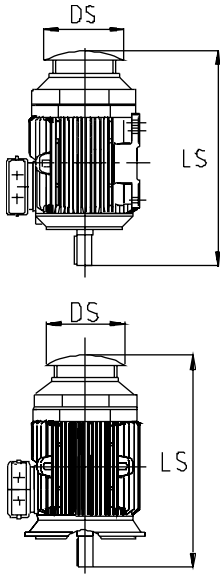

Protective roof, variant code 005

Motor size	IM 1001, IM B3 AND IM 3001, IM B5										IM 1001, IM B3							IM 3001, IM B5				Protective roof		
	D poles		GA poles		F poles		E poles		L max poles		A	B	B'	C	HD	K	H	M	N	P	S	DS	LS poles	
	2	4-8	2	4-8	2	4-8	2	4-8	2	4-8													2	4-8
71	14	14	16	16	5	5	30	30	250	250	112	90	–	45	190	7	71	130	110	160	10	140	275	275
80	19	19	21.5	21.5	6	6	40	40	282	282	125	100	–	50	220	10	80	165	130	200	12	155	320	320
90 S	24	24	27	27	8	8	50	50	310	310	140	100	–	56	235	10	90	165	130	200	12	175	345	345
90 L	24	24	27	27	8	8	50	50	335	335	140	125	–	56	235	10	90	165	130	200	12	175	370	370
100	28	28	31	31	8	8	60	60	380	380	160	140	–	63	270	12	100	215	180	250	15	195	410	410
112	28	28	31	31	8	8	60	60	395	395	190	140	–	70	290	12	112	215	180	250	15	220	425	425
132 S	38	38	41	41	10	10	80	80	462	462	216	140	–	89	330	12	132	265	230	300	15	260	490	490
132 M	38	38	41	41	10	10	80	80	500	500	216	178	–	89	330	12	132	265	230	300	15	260	530	530
160	42	42	45	45	12	12	110	110	711	711	254	210	254	108	388	14.5	160	300	250	350	18.5	328	756	756
180	48	48	51.5	51.5	14	14	110	110	706	706	279	241	279	121	426	14.5	180	300	250	350	18.5	359	756	756
200	55	55	59	59	16	16	110	110	774	774	318	267	305	133	573	18.5	200	350	300	400	18.5	414	844	844
225	55	60	59	64	16	18	110	140	841	871	356	286	311	149	620	18.5	225	400	350	450	18.5	462	921	951
250	60	65	64	69	18	18	140	140	875	875	406	311	349	168	683	24	250	500	450	550	18.5	506	965	965
280 SM	65	75	69	79.5	18	20	140	140	1088	1088	457	368	419	190	745	24	280	500	450	550	18	555	1190	1190
315 SM	65	80	69	85	18	22	140	170	1173	1203	508	406	457	216	840	30	315	600	550	660	23	624	1290	1320
315 ML	65	90	69	95	18	25	140	170	1224	1254	508	457	508	216	840	30	315	600	550	660	23	625	1341	1371
355 S	70	100	74.5	106	20	28	140	210	1344	1414	610	500	–	254	955	35	355	740	680	800	23	720	1476	1546
355 SM	70	100	74.5	106	20	28	140	210	1396	1466	610	500	560	254	955	35	355	740	680	800	23	720	1528	1703
355 ML	70	100	74.5	106	20	28	140	210	1501	1571	610	560	630	254	955	35	355	740	680	800	23	720	1633	1703

IM 3601, IM B14

Motor size	Flange size	P	M	N	S	T
71	C105	105	85	70	M6	2.5
71	C140	140	115	95	M8	3
80	C120	120	100	80	M6	3
80	C160	160	130	110	M8	3.5
90	C140	140	115	95	M8	3
90	C160	160	130	110	M8	3.5
100, 112	C160	160	130	110	M8	3.5
100, 112	C200	200	165	130	M10	3.5

Tolerances:

A, B	± 0,8	**H**	+0 -0.5
D, DA	ISO k6 < Ø 50mm	**N**	ISO j6
	ISO m6 > Ø 50mm	**C, CA**	± 0.8
F, FA	ISO h9		

Above table gives the main dimensions in mm.

For detailed drawings please our web-pages 'www.abb.com/motors&drives' or contact ABB Motors.

Frequency converter drive and hazardous environments

Motors with protection types EEx d, EEx de, EEx e (on request), Ex nA, EEx nA and dust ignition proof (with cast iron frame) are designed and certified for variable speed drives.

When using a squirrel cage Ex-motor with a frequency converter, the following points must be taken into ac-count, in addition to the general selection criteria.

A. Safety criteria

These criteria are imposed by the competent bodies in order to secure the use of motors with inverters in hazardous environments.

1. Type tests and certification

Every new combination of converter, motor, power range and speed range must be type tested before delivery.

ABB has type tested and certified at L.C.I.E. the complete range of Ex nA, EEx nA,Ex N and EEx d, EEx de so that in respect with the following conditions according to points 2 and 3 below no more individual type tests are needed.

2. Dimensioning

The voltage (or current) fed by the frequency converter is not purely sinusoidal. This may increase the losses, vibration, and noise of the motor. Further-more, a change in the distribution of the losses may affect the motor temperature balance and lead to an increase in the temperature of the bearings. In every case, the motor must be correctly sized according to the instructions supplied with the selected frequency converter (see loadability curve next page).

When using ABB converters use the Drive*Size* dimensioning programme or “ISOTHERM GUIDE-LINES” of the corresponding converter type for sizing the motors.

3. Critical parameters to indicate on the motor

In a frequency converter drive, the actual operating speed of the motor may deviate considerably from its nominal speed (i.e. the speed stamped on the rating plate). For higher speeds, ensure that the highest permissible rotational speed of the motor or the critical speed of the entire equipment, is not exceeded.

In addition, bearing lubrication and any ventilation noise suppression arrangements will require special attention. The maximum speed of Ex-motors must also be checked since the EN standard determines some speed limits for the cooling equipment.

4. Thermal protection

All ABB Ex-motors are equipped with PTC thermistors or as option for EEx d and EEx de motors bi-metal switches.

5. Rating plates

There will be an other rating plate indicating the essential speed duty parameters:

- speed range
- power range
- voltage & current range
- type of torque (constant or quadratic)
- converter setting (switching frequency FSW)

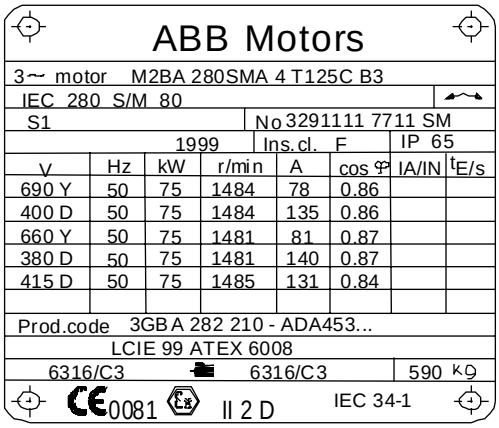

ABB Motors

3~ motor	M2BA 280SMA 4 T125C B3						
IEC 280 S/M 80							
S1			No 3291111 7711 SM				
		1999	Ins.cl. F			IP 65	
V	Hz	kW	r/min	A	cos φ	IA/IN	tE/s
690 Y	50	75	1484	78	0.86		
400 D	50	75	1484	135	0.86		
660 Y	50	75	1481	81	0.87		
380 D	50	75	1481	140	0.87		
415 D	50	75	1485	131	0.84		
Prod.code	3GBA 282 210 - ADA453...						
LCIE 99 ATEX 6008							
6316/C3			6316/C3			590 kg	
CE 0081			II 2 D		IEC 34-1		

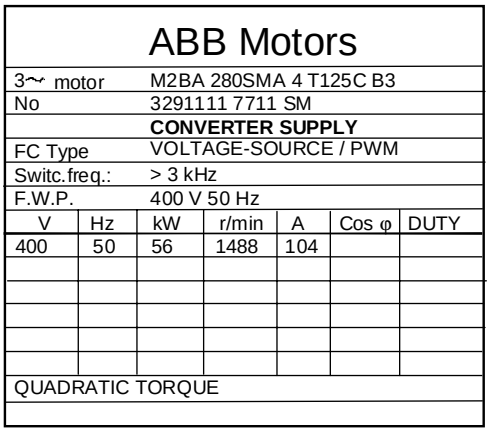

ABB Motors

3~ motor	M2BA 280SMA 4 T125C B3					
No	3291111 7711 SM					
	CONVERTER SUPPLY					
FC Type	VOLTAGE-SOURCE / PWM					
Switc.freq.:	> 3 kHz					
F.W.P.	400 V 50 Hz					
V	Hz	kW	r/min	A	Cos φ	DUTY
400	50	56	1488	104		
QUADRATIC TORQUE						

B. Technical criteria

1. Lubrication

The effectiveness of the motor lubrication should be checked by measuring the surface temperature of bearing endshields under normal operating condi-tions. If the measured temperature is +80°C or above, the relubrication intervals specified in ABB's standard instruction manuals must be shortened; i.e. the relubrication interval should be halved for every 15 K increase in bearing temperature. If this is not possible ABB recommends the use of lubricants suitable for high operating temperature conditions.These lubricants allow a normal relubrication interval and 15 K increase in bearing temperature conditions.

2. Insulation protection

If the motor has modern IGBT power components with very rapid switching practically all cables between the converter and the motor will be long.

Therefore, the precautions described in figure 1 below must be taken to avoid risks of high voltage peaks

For GTO converters, consideration must be given to the information about cable length, pulse rise time and the voltage overshoot using the voltage/cable length guideline.

3. Bearing currents

Bearing voltages and currents must be avoided in all Ex-motors. Insulated bearings or a properly dimensioned filter at the converter output must be used acc. to instructions in figure 1 below. If filter is not provided an insulated bearing construction must be used. When ordering clearly state which alternative will be used.

4. EMC

For fulfilling the EMC requirements, special EMC cable(s) must be used in addition to the correct cable gland mounting, with special, extra earthing pieces (variant code 704). Note that you must use only symmetrical shielded cables.

Correct earthing of the motor and the driven equipment is important to avoid bearing voltages and currents.

Figure 1. Selection rules for insulation in variable speed drives

	Motor frame size **< IEC 250**	**≥ IEC 280**	**≥ IEC 355**
$U_N \leq 500$ V	Standard Ex-motor	Standard Ex-motor + Insulated N-bearing	Standard Ex-motor + Insulated N-bearing + Common mode filter
$U_N \leq 600$ V	Standard Ex-motor + dU/dt-filter *OR* Reinforced insulation	Standard Ex-motor + dU/dt-filter + Insulated N-bearing *OR* Reinforced insulation + Insulated N-bearing	Standard Ex-motor + Insulated N-bearing + dU/dt-filter + Light Common mode filter *OR* Reinforced insulation + Insulated N-bearing + Common mode filter
$U_N \leq 690$ V	Reinforced insulation + dU/dt-filter	Reinforced insulation + dU/dt-filter + Insulated N-bearing	Reinforced insulation + Insulated N-bearing + dU/dt-filter + Light common mode filter

dU/dt filter
Series reactor. dU/dt decrease the changing rate of the phase and main voltages and thus reduce voltage stresses in the windings. dU/dt filters also decrease so called common mode currents and bearing currents.

Common mode and light common mode filters
Common mode filters are made of toroidal cores installed around motor cables. These filters reduce so called common mode currents in VSD applications and thus decrease the risk of bearing currents. Common mode filters do no significantly affect on the phase or main voltages on the motor terminals.
Common Mode Filter = 3 toroidal cores per each 3-phase motor cable
Light Common Mode Filter = 1 toroidal core per each 3-phase motor cable

Motor loadibility with ACS 600

The loadability curve below is a guide line curve, for exact values please contact ABB.

Please note that the curve is according to temperature rise B; class F temperature rise is not allowed.

Field weakening point at 50 Hz, from 0 Hz to 5 Hz only for DTC control valid.

If needed please contact us to get more information.

Figure 2. Motor loadability with ACS 600

Flameproof motors EEx d/EEx de T4 (50 Hz)

- corresponding curve for temperature class T5 and T6 on request

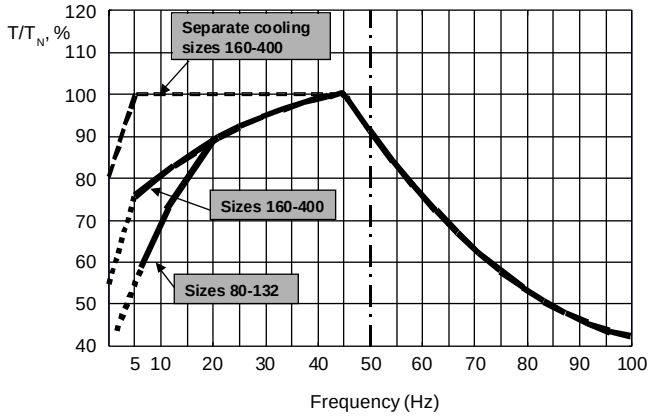

Non-sparking motors Ex nA, EEx nA, Ex N (50 Hz), frame sizes 63-132
Dust ignition proof cast iron motors T125 (50 Hz)

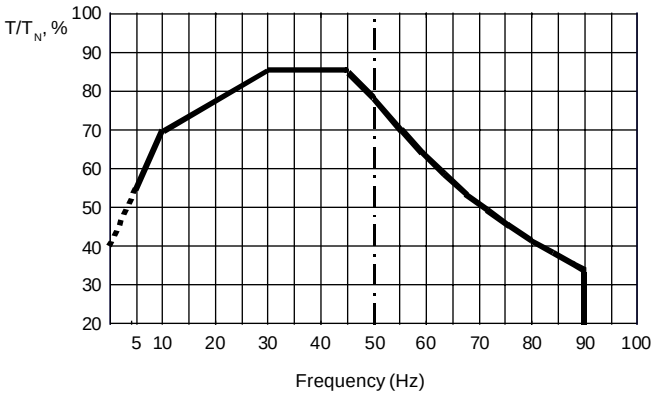

Non-sparking motors Ex nA, EEx nA, Ex N (50 Hz), frame sizes 160-400

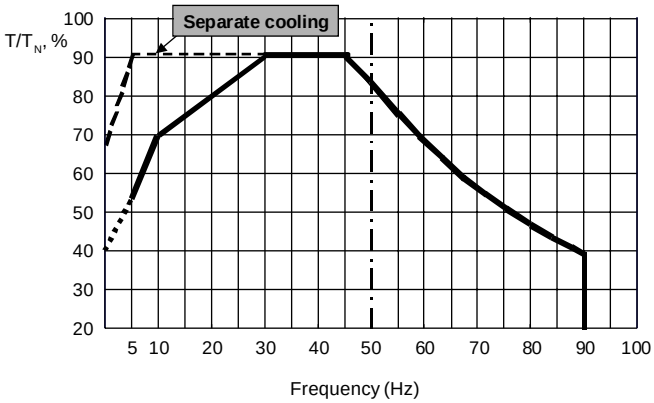

M3000 Motors for demanding industries

General design

– Standardized motors to meet IEC recommendations and CENELEC standards
– Corrosion and weather protected motors
– Offshore application: IP 55 or IP 56 on request
– Frame material: cast iron
– Insulation: class F
– Temperature rise: according class B
– High overload capacity: $T_{max} / T_N > 1.8$
– Accelerating torque: > 10%
– High starting performance
– Low noise level: < 85 dB(A)
– Design for variable speed applications

Safety of goods and personnel

– Explosion protection required :

Standard	Ex nA, EEx nA	EEx e	EEx d	EEx de
Yes	Yes	Yes	Yes	Yes

Variable speed applications

– EEx d, EEx de -motors are certified with included thermistors. A separate rating plate shows the regulation field and torque characteristics.
– EEx nA, Ex nA, Ex N -motors certified

Corrosion protection when needed

– Stainless steel screws
– Stainless steel grease nipples
– Stainless steel rating plates
– Corrosion resistant drain hole plug
– Radial seal, V-ring
– Fan made of reinforced glass fiber laminate
– 2 layers coating epoxy paint system
– Steel fan cover with epoxy coating
– Rotor and stator core corrosion protected

Interchangeability

– IEC output
– Network: 50 Hz or 60 Hz
– Large capacity of cable entries
– Double fixation holes on the majority of foot-mounted motors
– One earthing bolt in the terminal box and one on the frame as option
– Jacking bolts to make coupling easier as option
– Balancing full key or half key available as option

Running efficiency

– High efficiency motors and minimum power factor requested
– Winding protection as option; PTC or PT100
– Grease nipples as option
– SPM nipples as option
– Motors sizes 71 - 315 equipped with same bearings at both ends
– Balancing close to class R
– Bearing lifetime L_{10}, 40.000 h
– Bearing temperature rise max. +55°C

Approved design for specifications

– EEMUA (Engineering Equipment and Materials Users Association) - Variant code 773
– NORSOK (North Sea Territorial Waters) - Variant code 774
– SHELL DEP 33.66.05.31 - Gen, January 1999 - Variant code 775
– UIC (Union des Industries Chimiques) - Variant code 787
– VIK (Verband der industriellen Energie- und Kraftwirtschaft e.V.) - Variant code 421

Specification

Motors acc. to EEMUA (No 132 1988) standard – Variant code 773

General design for demanding industries

– Standardized motors to meet IEC recommendations and BS & EEMUA standards
– Corrosion and weather protected motors
– Frame material: cast iron
– Insulation: class F
– Temperature rise: according class B
– High overload capacity: $T_{max} / T_N > 1.8$
– Accelerating torque: > 10%
– Low starting current Design D ($P_2 > 40$ kW)
Design N ($P_2 \leq 40$ kW)
– Low noise level: < 81 dB(A)
– Design for variable speed applications

Safety of goods and personnel

– Explosion protection required :

Standard	Ex nA ,EEx nA	EEx e	EEx d	EEx de
Yes	Yes	Yes	Yes	Yes

Variable speed applications

– EEx d, EEx de -motors are certified with included thermistors and separate rating plate showing the regulation field and torque characteristics
– Ex nA, EEx nA -motors certified

Corrosion protection

– Stainless steel rating plates with extra details
– Corrosion resistant drain hole plug
– Radial seal, V-ring
– Fan made of reinforced glass fiber laminate
– 2 layers coating epoxy paint system
– Steel fan cover with epoxy coating
– Rotor and stator core corrosion protected

Interchangeability

– IEC or BS 5000 Part 10 outputs
– Network (large range of tolerances): 50 Hz and 60 Hz
– Star connection
– Large capacity of cable entries
– Metallic cable glands
– Double fixation holes on the majority of foot-mounted motors
– An earthing bolt in the terminal box and on the frame
– Balancing (half key): class R

Running efficiency

– High efficiency motors
– Winding protection as option
– Heaters as option
– Grease nipples when required
– Motors sized 71 - 315 are equipped with same bearings at both ends

Tests

– Abbreviated tests on all motors
– Complete test on each motor type > 150 kW

Specifications approved for opera- tions by:

– BP
– Courtaulds
– Dupont de Nemours
– Exxon
– N.A.M.
– SKB
– Texaco

Specification

Motors acc. to NORSOK (North Sea Territorial Waters) standard – Variant code 774

General design for demanding industries

– Design according to common requirements E-CR-001 and E-CR-002, Rev. 2, January 1996
– Standardized motors to meet IEC recommendations and CENELEC standards
– Corrosion and weather protected motors
– Frame material: cast iron
– Insulation: class F
– Temperature rise: according class B
– High overload capacity: $T_{max} / T_N > 2.1$
– Low noise level: < 77 dB(A) up to frame size 315
< 80 dB(A) in frame size 355
< 85 dB(A) in frame size 400
– Design for variable speed applications
– IP 56/fan cooled, with reinforced and labyrinth sealed air flow system, to powerful water jets
– For floating units according to classification societies; ambient temperature 45°C, temperature rise 90K is allowed (class F)
– For fixed units according to standard industrial design
– Half key balancing

Safety of goods and personnel

– Explosion protection required :

Standard	Ex nA , EEx nA	EEx e	EEx d	EEx de
Yes	Yes	Yes	No	Yes

Variable speed applications

– EEx de -motors certified with included thermistors and separate rating plate showing the regulation field and torque characteristics
– Ex nA, EEx nA -motors certified

Corrosion protection

– Stainless steel screws, quality A4 (acid proof type)
– Stainless steel grease nipples if equipped
– Stainless steel rating plates
– Stainless steel cables connecting flange plate
– Corrosion resistant drain hole plug
– Radial seal, V-ring and labyrinth type, depending on mounting position
– Fan made of reinforced glass fiber laminate or metal in antistatic material according to EN 50014
– 160 µm epoxy paint system
– Rotor and stator core corrosion protected

Interchangeability

– IEC output
– Network: 230-380-400-415-690 V 50 Hz
– Large capacity of cable entries
– Double fixation holes on the majority of foot-mounted motors give more flexible mounting
– One earthing bolt in the terminal box and one on the frame
– Metallic cable glands with clamping devices as option
– Star connection motors as standard, delta connection as option

Running efficiency

– High efficiency motors
– Grease nipples: frame size 225 and above
– SPM nipples: frame size 180 and above
– Motors sized 71 - 315 are equipped with same bearings at both ends
– Balancing: close to class R

Service

– Stock availability in Norway

Specifications approved for opera- tions in the North Sea territorial waters by:

– Amoco
– BP
– Elf
– Exxon
– Hydro
– Philips
– Saga
– Shell
– Statoil

Specification

Motors acc. to VIK (Verband der industriellen Energie- und Kraftwirtschaft e.V.) – Variant code 421

General design for demanding industries

– Standardized motors to meet IEC recommendations and CENELEC standards
– Frame material: cast iron
– Insulation: class F
– Temperature rise: according class B
– Low noise level: < 77 dB(A) (+3 dB(A) tolerance)
– Degree of protection: Min. IP 54

Safety of goods and personnel

– Explosion protection availability:

Standard	Ex nA, EEx nA	EEx e	EEx d	EEx de
Yes, practically Ex nA	Yes	Yes	No	Yes

Corrosion protection

– Stainless steel rating plates
– Fan made of reinforced glass fiber laminate or aluminium
– Heavy industry paint system (70 µm epoxy)

Interchangeability

– Nominal voltages 380-400-415 V; voltage 420 V 0n request
– IEC output and dimensions
– Shaft dimension requirements for 315, 355 and 400
– Wide range voltage up to frame size 250
– Stamping of 'VIK' on rating plate
– Additional rating plate in terminal box
– Prepared for mounting of customer identification plate
– Stamping of weight for motors above 30 kg
– Drainage hole in flange for IM V3
– Plugs in unused fixation holes on foot-mounted motors
– Drainage holes, when provided, must be closed
– Terminal box 90° turnable without turning terminal board
– Terminal box with gland plate from size 200
– Split terminal box from size 315
– Undetachable screws in terminal box cover
– Earthing terminal on frame
– Half key balanced
– EEx e up to size 200 (incl.): one rating plate for T1/T2 and one for T3
– Minimum t_E = 7 sec for EEx e

Running efficiency

– Nominal bearing life ≥ 40000 h in coupling
– Regreasable bearings available from size 250
– Button head grease nipples acc. to DIN 3404
– Grease intervals (amb. temp. 40°C) for 2 pole motors: min. 2000 h
– Grease intervals (amb. temp. 40°C) for 4-12 pole motors: min. 4000 h

Service

– Stock availability

Specifications approved for opera- tions by:

– Amoco
– Basf
– Bayer
– Degussa
– Dow Chemical
– CSM
– Henkel
– Hoechst
– Merck
– Schering
– Veba Oil

Certificates

Example of certification of flameproof motors with CE-marking acc. to directive 94/9/EC

LCIE

1 **ATTESTATION D'EXAMEN CE DE TYPE**

2 Appareils et systèmes de protection destinés à être utilisés en atmosphères explosibles
Directive 94/9/CE

3 Numéro de l'attestation CE de type
LCIE 99 ATEX 6009

4 Appareil ou système de protection

Moteur type M2JA 280 ..., M2KA 280 ...

5 Demandeur : ABB Motors OY

6 Adresse : PO Box 633
Strömbergin Puistotie 5A
65101 VAASA FINLANDE

7 Cet appareil ou système de protection et ses variantes éventuelles acceptées est décrit dans l'annexe de la présente attestation et dans les documents descriptifs cités en annexe.

8 Le LCIE, organisme notifié sous la référence 0081 conformément à l'article 9 de la directive 94/9/CE du Parlement européen et du Conseil du 23 mars 1994, certifie que cet appareil ou système de protection est conforme aux exigences essentielles en ce qui concerne la sécurité et la santé pour la conception et la construction d'appareils et de systèmes de protection destinés à être utilisés en atmosphères explosibles, données dans l'annexe II de la directive. Les vérifications et épreuves figurent dans notre rapport confidentiel N° 11 322 010.

9 Le respect des exigences essentielles en ce qui concerne la sécurité et la santé est assuré par la conformité aux documents suivants :
-EN 50014 (1992)
-EN 50018 (1994)
-EN 50019 (1994)
-EN 50281-1-1 (1998)

10 Le signe X lorsqu'il est placé à la suite du numéro de l'attestation, indique que ce matériel ou système de protection est soumis aux conditions spéciales pour une utilisation sûre, mentionnées dans l'annexe de la présente attestation.

11 Cette attestation d'examen CE de type concerne uniquement la conception et la construction de l'appareil ou du système de protection spécifié, conformément à la directive 94/9/CE. Des exigences supplémentaires de cette directive sont applicables pour la fabrication et la fourniture de l'appareil ou du système de protection.

12 Le marquage de l'appareil ou du système de protection devra comporter, entre autres indications utiles, les mentions suivantes :

Ex II 2 G et/ou D ou 3 D
EEx d/de IIB/IIC T1 à T6
IP 6X/5X, T ... °C

1 **EC TYPE EXAMINATION CERTIFICATE**

2 Equipment or Protective System Intended for use in Potentially explosive atmospheres
Directive 94/9/CE

3 EC type Examination Certificate number
LCIE 99 ATEX 6009

4 Equipment or Protective system

Motor type M2JA 280 ..., M2KA 280 ...

5 Applicant : ABB Motors OY

6 Address : PO Box 633
Strömbergin Puistotie 5A
65101 VAASA FINLAND

7 This equipment or protective system and any acceptable variation thereto is specified in the schedule to this certificate and the documents therein refered to.

8 LCIE, notified body number 0081 in accordance with article 9 of the directive 94/9/CE of the European Parliament and Council of 23 March 1994, certifies that this equipment or protective system has been found to comply with the Essential Health and Safety Requirements relating to the design and construction of equipment and protective system intended for use in potentially explosive atmospheres, given in Annex II to the directive.
The examination and test results are recorded in confidential report No 11 322 010.

9 Compliance with the Essential Health and Safety Requirements has been assured by compliance with :

-EN 50014 (1992)
-EN 50018 (1994)
-EN 50019 (1994)
-EN 50281-1-1 (1998)

10 If the sign X is placed after the certificate number, it indicates that the equipment or protective system is subject to special conditions for safe use specified in the schedule to this certificate.

11 This EC Type examination certificate relates only to the design and construction of this specified equipment or protective system in accordance with the Directive 94/9/EC. Further requirements of Directive applies to the manufacture and supply of this equipment or protective system.

12 The marking of the equipment or protective system shall include the following :

Ex II 2 G and/or D or 3 D
EEx d/de IIB/IIC T1 to T6
IP 6X/5X, T ... °C

Fontenay-aux-Roses, le 9 septembre 1999

Le Directeur de l'organisme certificateur
Manager of the certification body
Michel VIEILLEFOSSE
Président et directeur général

Timbre sec/dry seal

Page 1/5

Seul le texte en français peut engager la responsabilité du LCIE. Ce document ne peut être reproduit que dans son intégralité, sans aucune modification
The LCIE's liability applies only on the French text. This document may only be reproduced in full and without any change.

LABORATOIRE CENTRAL DES INDUSTRIES ELECTRIQUES

Société anonyme à Directoire et Conseil de surveillance au capital de 103 592 000 Francs - RCS Nanterre B 408 363 174

Siège social : 33, avenue du Général Leclerc - F 92260 Fontenay-aux-Roses - Tél. : +33 (0)1 40 95 60 60

Certificates

Example of a EC Declaration of Conformity

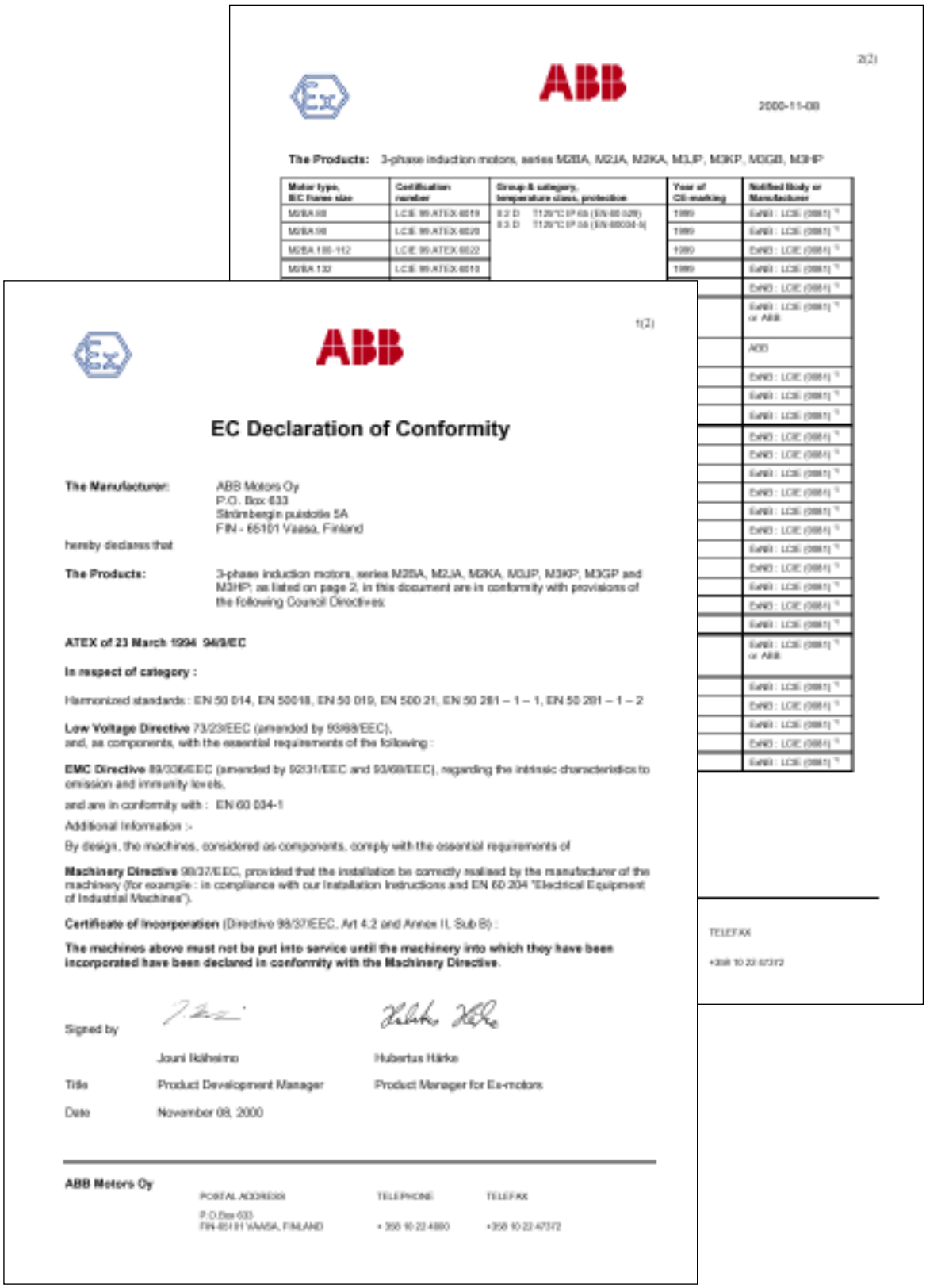

2(2)

2000-11-08

The Products: 3-phase induction motors, series M2BA, M2JA, M2KA, M3JP, M3KP, M3GP, M3HP

Motor type, IEC frame size	Certification number	Group & category, temperature class, protection	Year of CE-marking	Notified Body or Manufacturer
M2BA 90	LCIE 99 ATEX 6019	II 3 D T120°C IP 65 (EN 60 529) II 3 D T120°C IP 55 (EN 60034-5)	1999	ExNB : LCIE (0081) [1]
M2BA 100	LCIE 99 ATEX 6020		1999	ExNB : LCIE (0081) [1]
M2BA 100-112	LCIE 99 ATEX 6022		1999	ExNB : LCIE (0081) [1]
M2BA 132	LCIE 99 ATEX 6010		1999	ExNB : LCIE (0081) [1]
				ExNB : LCIE (0081) [1]
				ExNB : LCIE (0081) [1] or ABB
				ABB
				ExNB : LCIE (0081) [1]
				ExNB : LCIE (0081) [1]
				ExNB : LCIE (0081) [1]
				ExNB : LCIE (0081) [1]
				ExNB : LCIE (0081) [1]
				ExNB : LCIE (0081) [1]
				ExNB : LCIE (0081) [1]
				ExNB : LCIE (0081) [1]
				ExNB : LCIE (0081) [1]
				ExNB : LCIE (0081) [1]
				ExNB : LCIE (0081) [1]
				ExNB : LCIE (0081) [1]
				ExNB : LCIE (0081) [1]
				ExNB : LCIE (0081) [1]
				ExNB : LCIE (0081) [1] or ABB
				ExNB : LCIE (0081) [1]
				ExNB : LCIE (0081) [1]
				ExNB : LCIE (0081) [1]
				ExNB : LCIE (0081) [1]
				ExNB : LCIE (0081) [1]

TELEFAX

+358 10 22 47372

1(2)

EC Declaration of Conformity

The Manufacturer: ABB Motors Oy
P.O. Box 633
Strömbergin puistotie 5A
FIN - 65101 Vaasa, Finland

hereby declares that

The Products: 3-phase induction motors, series M2BA, M2JA, M2KA, M3JP, M3KP, M3GP and M3HP; as listed on page 2, in this document are in conformity with provisions of the following Council Directives:

ATEX of 23 March 1994 94/9/EC

In respect of category :

Harmonized standards : EN 50 014, EN 50018, EN 50 019, EN 500 21, EN 50 281 – 1 – 1, EN 50 281 – 1 – 2

Low Voltage Directive 73/23/EEC (amended by 93/68/EEC),
and, as components, with the essential requirements of the following :

EMC Directive 89/336/EEC (amended by 92/31/EEC and 93/68/EEC), regarding the intrinsic characteristics to emission and immunity levels,

and are in conformity with : EN 60 034-1

Additional information :-

By design, the machines, considered as components, comply with the essential requirements of

Machinery Directive 98/37/EEC, provided that the installation be correctly realised by the manufacturer of the machinery (for example : in compliance with our Installation Instructions and EN 60 204 "Electrical Equipment of Industrial Machines").

Certificate of Incorporation (Directive 98/37/EEC, Art 4.2 and Annex II, Sub B) :

The machines above must not be put into service until the machinery into which they have been incorporated have been declared in conformity with the Machinery Directive.

Signed by		
	Jouni Ikäheimo	Hubertus Härke
Title	Product Development Manager	Product Manager for Ex-motors
Date	November 08, 2000	

ABB Motors Oy

POSTAL ADDRESS	TELEPHONE	TELEFAX
P.O.Box 633 FIN-65101 VAASA, FINLAND	+ 358 10 22 4880	+358 10 22 47372

Certificates

Example of certification of Increased safety motors

DEMKO
Testing and Certification

1. **CERTIFICATE OF CONFORMITY**

2. DEMKO No. **97D.120928**

3. This certificate is issued for **Squirrel-cage Motors**

   type **M2AA 160 . _ .**

4a. Manufactured by **ABB Motors AB, S-721 70 Västerås, Sweden**

4b. and submitted by **ABB Motors AB, S-721 70 Västerås, Sweden**

5. This electrical apparatus and any acceptable variation thereto is specified in the Appendix to this certificate and the documents therein referred to.

6. DEMKO being an Approval Certification Body in accordance with Article 14 of the Council Directive of the European Communities of 18th December 1975, document 76/117/EEC, confirms that the apparatus has been found to comply with the harmonized European Standards:

   EN 50014 incl. amd. 1 - 5
   EN 50019 incl. amd. 1 - 5

7. The apparatus marking shall include the code:

   EEx e II T3

8. The supplier of the electrical apparatus referred to in this certificate has the responsibility to ensure that the apparatus conforms to the specification laid down in the Appendix to this certificate and has satisfied routine verifications and tests specified therein.

9. The apparatus may be marked with the Distinctive Community Mark specified in Annex II to the Council Directive of 16 January 1984, document 84/47/EEC. A facsimile of this mark is printed at the top of this certificate. The marking of the equipment shall be visible, legible and durable.

For and on behalf of DEMKO

Herlev, 1997-05-16

Jakob Nittegaard
Department Manager

This certificate is only allowed to be rendered in entirety and without alterations.

DEMKO A/S Testing and Certification, P.O. Box 514, Lyskaer 8, DK-2730 Herlev, Denmark
Phone +45 44 85 65 65 Telefax +45 44 85 65 00 e-mail: demko@demko.dk

A subsidiary of

Underwriters Laboratories Inc.

Ordering information

Sample order

When placing an order, the motor type, size and product code must be specified. The product code of the motor is composed in accordance with the following examples.

A	B	C					D, E, F			G
M3JP	160 M	3GJP	162	300	-		A	D	A	003 etc.
		1-4	5-6	7	8-10	11	12	13	14	

A Motor type
B Motor size
C Product code
D Mounting arrangement code
E Voltage and frequency code
F Generation code
G Variant codes

Description of the product code:

Positions 1 - 4

3GAA = Totally enclosed motor with aluminium frame
3GBA = Totally enclosed motor with cast iron frame
3GJP = Totally enclosed frameproof motor EE xd with cast iron frame
3GKP = Totally enclosed flameproof motor EEx de with cast iron frame

Positions 5 and 6

IEC-frame size

06 = 63	**10** = 100	**18** = 180	**28** = 280
07 = 71	**11** = 112	**20** = 200	**31** = 315
08 = 80	**13** = 132	**22** = 225	**35** = 355
09 = 90	**16** = 160	**25** = 250	**40** = 400

Position 7

Speed (pole pairs)

1 = 2 poles	**4** = 8 poles	**7** ≥12 poles
2 = 4 poles	**5** = 10 poles	**8** =Two-speed motors
3 = 6 poles	**6** = 12 poles	**9** = Multi-speed motors

Position 8-10

Running number series

Position 11 - (Dash)

Position 12

Mounting arrangement

A = Foot-mounted, top mounted terminal box
R = Foot-mounted, terminal box RHS seen from D-end
L = Foot-mounted, terminal box LHS seen from D-end
B = Flange-mounted, large flange with clearance holes
C = Flange-mounted, small flange with tapped holes
V = Flange-mounted, Special flange
H = Foot/flange-mounted, large flange with clearance holes
J = Foot/flange-mounted, small flange with tapped holes
S = Foot/flange-mounted, terminal box RHS seen from D-end
T = Foot/flange-mounted, terminal box LHS seen from N-end
F = Foot/flange-mounted, special flange

Position 13

Voltage/frequency code

See tables on the technical data pages.

Position 14

Generation code

A, B, C...

Generation code is followed by variant codes according to the hazardous area, see below and on corresponding pages with variant codes:

094	Ex nA design acc. to IEC 79-15, Ex N acc. to BS 5000/16
097	EEx e design
407	Ex N design, fulfilling BS 5000/16, certif. provided
455	Ex N design, fulfilling BS 5000/16, without certif.
456	Ex nA design,fulfilling IEC 79-15,certif. provided
457	Ex nA design,fulfilling IEC 79-15,without certif.
480	EEx nA fulfilling EN 50021.
458	EEx e design, fulfilling EN 50014 and EN 50019
274	EEx e design, temperature class T4
275	EEx e design, temperature class T5
276	EEx e design, temperature class T6
461	EEx d(e) design, Group IIC
462	EEx d(e) design, temperature class T5
463	EEx d(e) design, temperature class T6

Terms and definitions

ATEX	ATEX is not a standard but an acronym for "Atmospheres Explosives". In common language ATEX stands for the new directive 94/9/EC about the new procedures of certification on electrical equipment for hazardous areas.
Explosive atmosphere	A mixture with air, under atmospheric conditions, of flammable substances in the form of gas, vapour, mist, dust or fibres in which, after ignition, combustion spreads throughout the unconsumed mixture.
Explosive dust atmosphere	A mixture with air, under atmospheric conditions, of flammable substances in the form of dust of fibres in which, after ignition, combustion spreads throughout the unconsumed mixture.
Explosive gas atmosphere	A mixture with air, under atmospheric conditions, of flammable substances in the form of gas, vapour or mist, in which, after ignition, combustion spreads throughout the unconsumed mixture.
Flameproof bushing	An insulating device carrying one or more conductors through internal or external walls of a flameproof enclosure without affecting the flameproof properties of the enclosure or its compartments.
Flameproof enclosure "d", explosion proof enclosure	A type of protection of electrical apparatus in which the enclosure will withstand an internal explosion of a flammable mixture which has penetrated into the interior without suffering damage and without causing ignition, through any joints or structural openings in the enclosure, of an external explosive atmosphere consisting of one or more of the gases or vapours for which it is designed.
Flameproof joint	The place where corresponding surfaces of the different parts of a flameproof enclosure come together and prevent the transmission of an internal explosion to the explosive gas atmosphere surrounding the enclosure.
Gap (of a flameproof joint)	The distance between the corresponding surfaces of a flameproof joint. For cylindrical surfaces, the gap is the diametral clearance (difference between the two diameters).
Ignition temperature of an explosive substance	The lowest temperature of a hot surface at which ignition occurs of a flammable substance.
Increased safety "e"	A type of protection in which additional measures are applied so as to give increased security against the possibility of excessive temperatures and of the occurrence of arcs and sparks inside and on external parts of electrical apparatus which does not produce arcs or sparks in normal service.

Length of flameproof joint Length of flame path Width of flameproof joint	The shortest path through a flameproof joint from the inside to the outside of a flameproof enclosure.
Limiting temperature (of increased safety electrical apparatus)	The maximum permissible temperature of apparatus of parts of apparatus equal to the lower of the two temperatures determined by: a) the danger of ignition of the explosive gas atmosphere b) the thermal stability of the materials used.
Maximum permitted gap	The highest value of gap, defined according to the electrical apparatus group, the volume of the flameproof enclosure and the length of the flameproof joint.
Maximum surfaces temperature	The highest temperature attained in service under the most adverse operating conditions within the rating of the electrical apparatus by any part or any surface of the apparatus that could produce an ignition of the surrounding explosive atmosphere.
Non-sparking "nA"	A type of protection in which measures are applied so as to give security against the possibility of excessive temperatures and of the occurrence of arcs and sparks inside and on external parts of electrical apparatus which does not produce arcs or sparks in normal service.

ABB LV Motors' total product offer

M2000 range

Motor type	IEC frame size	Output kW
Aluminium motors	56 - 100	0.055 - 4 kW
Cast iron motors	71 - 250	0.25 - 55 kW

M3000 range

Motor type	IEC frame size	Output kW
Aluminium motors	63 - 250	0.18 - 75 kW
Cast iron motors	71 - 400	0.25 - 710 kW
Steel motors	280 - 400	75 - 630 kW
Hazardous area motors	63 - 400	0.18 - 630 kW
Marine motors	63 - 400	0.18 - 630 kW
Open drip proof motors (IP 23)	250 - 400	75 - 800 kW
Brake motors	71 - 160	0.18 - 15 kW
	NEMA frame size	**Output HP**
NEMA motors	48 - 587	1/4 - 700 HP

Special types/alternatives

- high speed motors, over 3000 r/min
- motor adjusted with a holding brake
- traction motors
- generators for wind mills
- roller tables and mines
- water cooled motors
- slip-ring motors
- motors with vertical hollow shaft
- smoke venting design
- stator/rotor units

Catalogues and brochures for
these motors are available from:

ABB Motors
Marketing communications
P.O.Box 633
FIN-65101 Vaasa
tel. +358 (0) 10 22 4000
fax +358 (0) 10 22 43575
www.abb.com/motors&drives

Visit our web site

www.abb.com/motors&drives

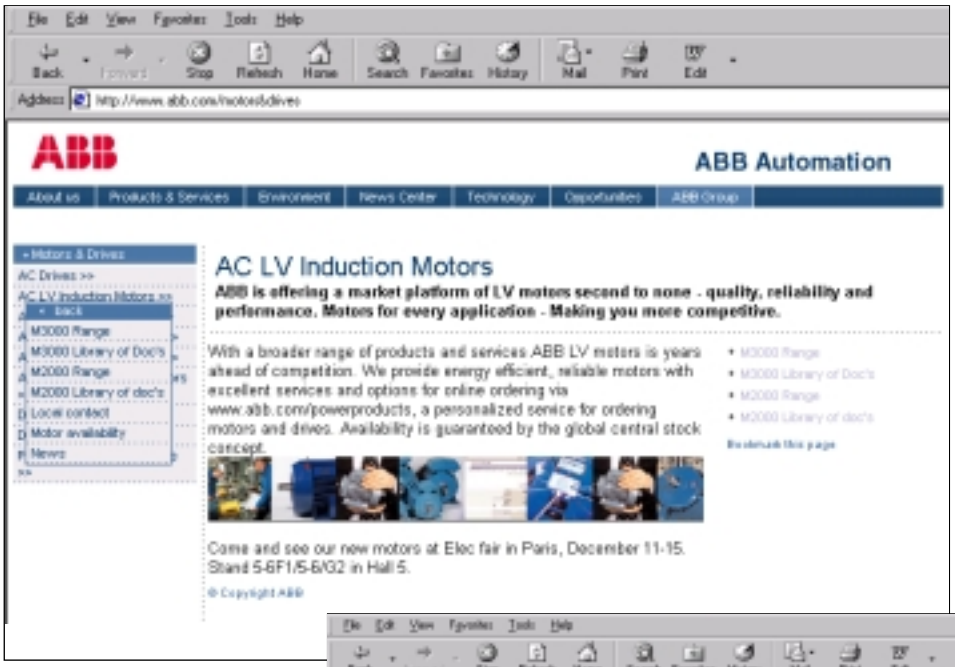

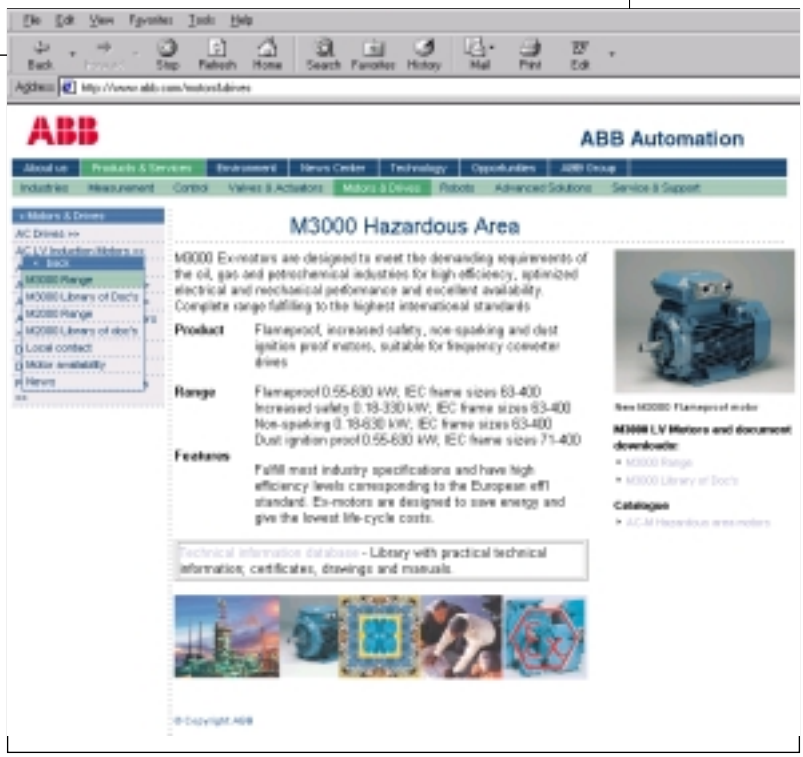

Motors & Drives
- AC LV Induction Motors
- M3000 Range
  - Standard motors
  - Premium efficiency motors
  - Process motors
  - **Hazardous area motors**
  - Marine motors
  - Brake motors
  - Wind turbine generators
  - Roller table motors
  - Single phase motors
  - Fan application motors
  - Water-cooled motors
- M3000 Library of documents
- M2000 Range
- M2000 Library of documents
- Local contacts

LV Motors

Manufacturing sites (*) and some of the biggest sales companies.

Australia
ABB Industry Pty Ltd
2 Douglas Street
Port Melbourne,
Victoria, 3207
Tel: +61 (0) 3 9644 4100
Fax: +61 (0) 3 9646 9362

Austria
ABB AG
Wienerbergstrasse 11 B
A-1810 Wien
Tel: +43 (0) 1 601 090
Fax: +43 (0) 1 601 09 8305

Belgium
Asea Brown Boveri S.A.-N.V.
Hoge Wei 27
B-1930 Zaventem
Tel: +32 (0) 2 718 6311
Fax: +32 (0) 2 718 6657

Brazil
Asea Brown Boveri Ltda
P.O.Box 00975
06020-902 Osasco -SP
Tel: +55 (0) 11 7088 9526
Fax: +55 (0) 11 7088 4523

Canada
Asea Brown Boveri, Inc.
200 Chisholm Dr.,
Milton, Ontario L9T 5E7
Tel: +1 905 875 4500
Fax: +1 905 875 0077

China*
ABB Yuejin Motors (Shanghai)
Company Limited
8 Guang Xing Rd.,Rong Bei
Town, Songjiang County,
Shanghai 201613
Tel: +86 21 5778 0988
Fax: +86 21 5778 1364

Chile
Asea Brown Boveri S.A.
P.O.Box 581-3
Santiago
Tel: +56 (0) 2 5447 100
Fax: +56 (0) 2 5447 405

Denmark*
ABB Motors A/S
Petersmindevej 1
DK-5000 Odense C
Tel: +45 65 477 777
Fax: +45 65 477 888

Finland*
ABB Motors Oy
P.O.Box 633
FIN-65101 Vaasa
Tel: +358 (0) 10 22 4000
Fax: +358 (0) 10 22 47372

France
ABB Automation
15, rue Sully
F-69153 Décines Charpieu
Cedex
Tel: +33 (0) 472 054 040
Fax: +33 (0) 472 020 345

Germany
ABB Automation Products
GmbH
P.O.Box 10 02 61
D-68002 Mannheim
Tel: +49 (0) 621 3810
Fax: +49 (0) 621 381 6820

Hong Kong
ABB Automation Limited
3 Dai Hei Street
Tai Po Industrial Estate
Tai Po New Territories
Hong Kong
Tel: +852 292 938 38
Fax: +852 292 938 87

India*
Asea Brown Boveri Ltd
P.O.Box 16
Faridabad 121 001
Tel: +91 (0) 129 5233 313
Fax: +91 (0) 129 5234 288

Indonesia
P.T. Abdibangun Buana
P.O.Box 3781
Jakarta 10002
Tel: +62 (0) 21 314 9115
Fax: +62 (0) 21 315 3963

Ireland
Asea Brown Boveri Ltd
Components Division
Belgard Road
Tallaght, Dublin 24
Tel: +353 (0) 1 405 7300
Fax: +353 (0) 1 405 7327

Italy*
ABB Industria S.p.a.
Motor Division
Viale Edison 50
I-20099 Sesto S. Giovanni,
Milano
Tel: +39 02 262 321
Fax: +39 02 262 32723

Japan
ABB K.K.
2-39, Akasaka 5-Chome
Minato-Ku
Tokyo 107
Tel: +81 (0) 3 556 38605
Fax: +81 (0) 3 556 38615

Korea
ABB Ltd. Korea
513, Sungsung-dong,
Chonan-SI
Chungchongnam-Do
Tel: +82 2 528 2327
Fax: +82 2 546 8517

Mexico
ABB México, S.A. de C.V.
Apartado Postal 111
CP 54000 Tlalnepantla
Edo. de México, México
Tel: +52 5 328 1400
Fax: +52 5 390 3720

The Netherlands
ABB B.V.
Dept. LV motors (APP2R)
P.O.Box 301
NL-3000 AH Rotterdam
Tel: +31 (0) 10 4078 879
Fax: +31 (0) 10 4078 345

New Zealand
ABB Automation
Motor Sales
P.O.Box 22167
Otahuhu, Auckland
Tel: +64 (0) 9 276 6016
Fax: +64 (0) 9 276 1303

Norway
ABB Industri AS
P.O.Box 6540 Rodelökka
N-0501 Oslo 5
Tel: +47 22 872 000
Fax: +47 22 872 541

Singapore
ABB Industry Pte Ltd
P.O.Box 95
Pasir Panjang Post Office
Singapore 9111
Tel: +65 775 3777
Fax: +65 778 0222

Spain*
ABB Motores S.A.
P.O.Box 81
E-08200 Sabadell
Tel: +34 93 728 8500
Fax: +34 93 728 8554

Sweden*
ABB Motors AB
S-721 70 Västerås
Tel: +46 (0) 21 329 000
Fax: +46 (0) 21 124 103

Switzerland
ABB Normelec AG
Badenerstrasse 790
Postfach
CH-8048 Zürich
Tel: +41 (0) 1 435 6666
Fax: +41 (0) 1 435 6603

Taiwan
Asea Brown Boveri Ltd
P.O.Box 81-54
Taipei
Tel: +886 (0) 2 579 9340
Fax: +886 (0) 2 577 9434

Thailand
ABB Limited
5th Building, 322 Moo 4
Bangpoo Industrial Estate Soi 6
Sukhumvit Road, Prekasa,
Muang, Samutprakarn 10280
Tel: +662 (0) 709 3346
Fax: +662 (0) 709 3765

The United Kingdom
ABB Automation Ltd
9 The Towers, Wilmslow Road
Didsbury
Manchester, M20 2AB
Tel: +44 (0) 161 445 5555
Fax: +44 (0) 161 448 1016

USA
ABB Automation Inc.
AC Motors
P.O.Box 372
Milwaukee
WI 53201-0372
Tel: +1 262 785 8364
Fax: +1 262 785 8628

Venezuela
Asea Brown Boveri S.A.
P.O.Box 6649
Carmelitas,
Caracas 1010A
Tel: +58 (0) 2 238 2422
Fax: +58 (0) 2 239 6383

Printed in Finland, Waasa Graphics Oy, 00-12/7.000

ABB Motors
Marketing Communications
P.O.Box 633
FIN-65101 Vaasa Finland
tel. +358 (0) 10 22 4000
fax +358 (0) 10 22 43575
www.abb.com/motors&drives

Catalogue BU/Ex-motors GB 00-12